ORDER NO. VED87080056C1
D6

Service Manual

Color Video Monitor

CT-1331Y

G14M-3 Chassis

The service technician is required to read and follow the "Safety Precautions" and "Important Safety Notice" in this service manual.

Specifications

Power Source:	120V AC, 60 Hz
Power Consumption:	73W
Anode Voltage:	24.5 kV $^{+1.0}_{-1.5}$ kV
Picture Tube:	89 Sq. inches (13" diagonal)
Speaker Output:	1.5W (8Ω)
Video/Audio Terminals: (LINE A/LINE B)	Video Input: 1.0Vp-p, 75Ω or HIGH impedance (Auto), BNC type connector
Video/Audio Terminal:	Audio Input: 0.5Vrms, 10kΩ or more, phono type connector
	Video Through Out (Automatic Termination Opener BNC connector)
	Audio Through Out: Phono type connector
S-Video Input:	Y signal... 1Vp-p, C signal ...0.285Vp-p, 75Ω or HIGH impedance (Manual), MINIDIN4P type connector
S-Video Output:	Y signal ... 1Vp-p, C signal ... 0.3Vp-p, 75Ω or HIGH impedance (Manual), MINIDIN4P type connector

VTR Terminal:	Video Input:	1.0Vp-p ± 10%, 75Ω
	Audio Input:	1.0Vrms, 10kΩ or more
	Video Output:	1.0Vp-p ± 10%, 75Ω
	Audio Output:	0.3Vrms 10kΩ or less
Monitor Out Terminals:	Video Output:	1.0Vp-p, 75Ω, BNC type connector
	Audio Output:	0.5Vrms, 10kΩ or less, phono type connector
Resolution:		420 TV Lines (Horizontal)
Picture Linearity:		Vertical within ± 7%
		Horizontal within ± 7%
Dimensions:	Width:	15-7/16 inches (392 mm)
	Height:	16-5/32 inches (410 mm)
	Depth:	14-13/32 inches (366 mm)
Weight:		29-7/8 lbs. (12.8 kg)
Operating Temperature:		32°F ~ 104°F (0°C ~ +40°C)
Operating Humidity:		20% ~ 80%

Specifications are subject to change without notice.
Weight and dimensions shown are approximate.

Panasonic®

Panasonic Industrial Company
Division of Matsushita Electric
Corporation of America
Two Panasonic Way Secaucus,
New Jersey 07094

Panasonic Hawaii, Inc.
91-238, Kauhi St. Ewa Beach
P.O. Box 774
Honolulu, Hawaii 96808-0774

Panasonic Sales Company,
Division of Matsushita Electric
of Puerto Rico, Inc.
Ave, 65 De Infanteria, KM 9.7
Victoria Industrial Park
Carolina, Puerto Rico 00630

CONTENTS

SAFETY PRECAUTIONS. 2, 3
LOCATION OF CONTROLS OPERATING INSTRUCTIONS AND CONNECTIONS. . . . 4 ~ 7
DISASSEMBLY INSTRUCTIONS 8
CIRCUIT EXPLANATION 9
MEASUREMENTS AND ADJUSTMENTS. . . . . 10 ~ 13
CIRCUIT BOARD AND WIRING CONNECTION DIAGRAM . . . . . 14 ~ 19
BLOCK DIAGRAM. 20, 21
EQUIVALENT CIRCUIT AND FUNCTION OF TERMINAL (IC601 : AN5600K) 22
SCHEMATIC DIAGRAM . . . . . 23 ~ 26
PARTS LOCATION. . . . . 27 ~ 29
REPLACEMENT PARTS LIST . . . . . 30 ~ 35

- PRODUCT COMPLIES WITH DHHS RULES 21 CFR SUBCHAPTER J IN EFFECT AS OF DATE OF MANUFACTURE.

IMPORTANT SAFETY NOTICE

There are special components used in Panasonic Monitor sets which are important for safety. These parts are shaded on the schematic diagram and on the replacement parts list. It is essential that these critical parts should be replaced with manufacturer's specified parts to prevent X-RADIATION, shock, fire, or other hazards. Do not modify the original design without permission of PANASONIC INDUSTRIAL COMPANY.

SAFETY PRECAUTIONS

GENERAL GUIDELINES

1. It is advisable to insert an isolation transformer in the AC supply before servicing a hot chassis.
2. When servicing, observe the original lead dress, especially the lead dress in the high voltage circuits. If a short circuit is found, replace all parts which have been overheated or damaged by the short circuit.
3. After servicing, see to it that all the protective devices such as insulation barriers, insulation papers, shields, and isolation R-C combinations, are properly installed.
4. Before turning the monitor on, measure the resistance between B+ line and cold side chassis ground. Connect the ⊖ side of an ohmmeter to the B+ lines, and the ⊕ side to chassis ground. Each line should have more resistance than specified, as follows:

B+ Line	Minimum Resistance
180V	100kΩ
115V	3kΩ
25V	500Ω
15V	10kΩ
12V	200Ω

5. When the monitor is not used for a long period of time, unplug the power cord from the AC outlet.
6. Potentials, as high as 28.0 kV are present when this monitor is in operation. Operation of the monitor without the rear cover involves the danger of a shock hazard from the monitor power supply. Servicing should not be attempted by anyone who is not throughly familiar with the precautions necessary when working on high voltage equipment. Always discharge the anode of the picture tube to chassis ground before handling the tube.
7. After servicing make the following leakage current checks to prevent the customer from being exposed to shock hazards.

LEAKAGE CURRENT COLD CHECK

1. Unplug the AC cord and connect a jumper between the two prongs on the plug.
2. Turn on the monitor's power switch.
3. Measure the resistance value, with an ohmmeter, between the jumpered AC plug and each exposed metallic cabinet part on the monitor, such as screwheads, connectors, control shafts, etc.

   When the exposed metallic part has a return path to the chassis, the reading should be more than 1MΩ.

   When the exposed metal does not have a return path to the chassis, the reading must be ∞.

LEAKAGE CURRENT HOT CHECK (See Fig. 1)

1. Plug the AC cord directly into the AC outlet. Do not use an isolation transformer for this check.
2. Connect a 1.5 kΩ, 10 watt resistor, in parallel with a 0.15 μF capacitor, between each exposed metallic part on the set and a good earth ground such as a water pipe, as shown in Fig. 1.
3. Use an AC voltmeter, with 1000 kohms/volt or more sensitivity, to measure the potential across the resistor.
4. Check each exposed metallic part, and measure the voltage at each point.
5. Reverse the AC plug in the AC outlet and repeat each of the above measurements.
6. The potential at any point should not exceed 0.75 volts RMS. A leakage current tester (Simpson Model 229 or equivalent) may be used to make the hot checks, leakage current must not exceed 500 μA. In case a measurement is outside of the limits specified, there is a possibility of a shock hazard, and the monitor should be repaired and rechecked before it is returned to the customer.

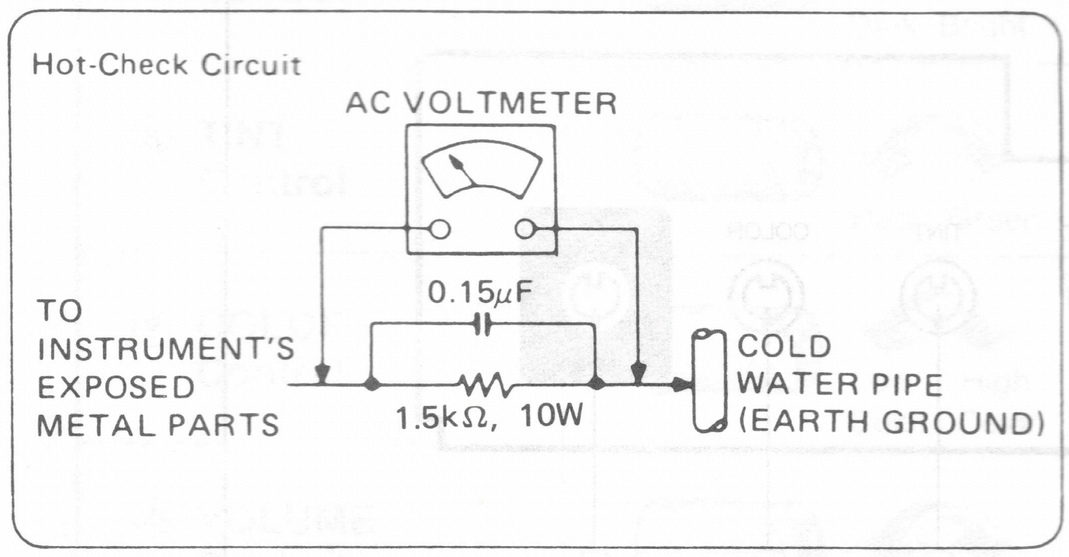

Fig. 1

X-RADIATION

WARNING: 1. The potential source of X-Radiation in Monitor set is the High Voltage section and picture tube.

2. When using a picture tube test jig for service, make sure that jig jis capable of handling 26.0 kV without causing X-Radiation.

NOTE: It is important to use an accurate periodically calibrated high voltage meter.

1. Turn the Bright control (R321) fully counterclockwise.
2. Set the SERVICE switch to the SERVICE position.
3. Measure the High Voltage. The meter (electrostatic type) reading should indicate 24.5 kV $^{+\ 1.0}_{-\ 1.5}$ kV. If the meter indication is out of tolerance, immediate service and correction is required to prevent the possibility of premature component failure.
4. To prevent an X-Radiation possibility, it is essential to use the specified picture tube.

HORIZONTAL OSC. DISABLE CIRCUIT TEST

This test must be made as a final check before the set is returned to the customer.

1. With the rear cover removed, supply a nominal 120V AC to the set, turn on the power switch.
2. Set the customer controls to their normal operating position.
3. Make short circuit TP91 and pin ④ of IC551 with a 180kΩ resistor.
4. If this does not occur, the Horizontal Osc. Disable Circuit is not operating. Follow the Horizontal Oscillator Disable Circuit Repair Procedures before the set is returned to customer.

REPAIR PROCEDURES OF HORIZONTAL OSCILLATOR DISABLE CIRCUIT

1. Connect a DC voltmeter between capacitor C524 ⊕ on the A-board and chassis ground. If nearly +24.7V is not present on that point, find the cause.

   Check R535, C524 and D510.
2. Connect a DC voltmeter between pin ㊴ of IC601 on the A-board and chassis ground.

   If nearly +2.1V is not present on that point, check R506, R507, R512, R339, IC551 and IC601.
3. Carefully check the above specified parts and related circuits and parts. When the circuit is repaired, the Horizontal Oscillator Disable Circuit Test must be made again.

LOCATION OF CONTROLS OPERATING INSTRUCTIONS AND CONNECTIONS

CONTROL LOCATIONS

FRONT

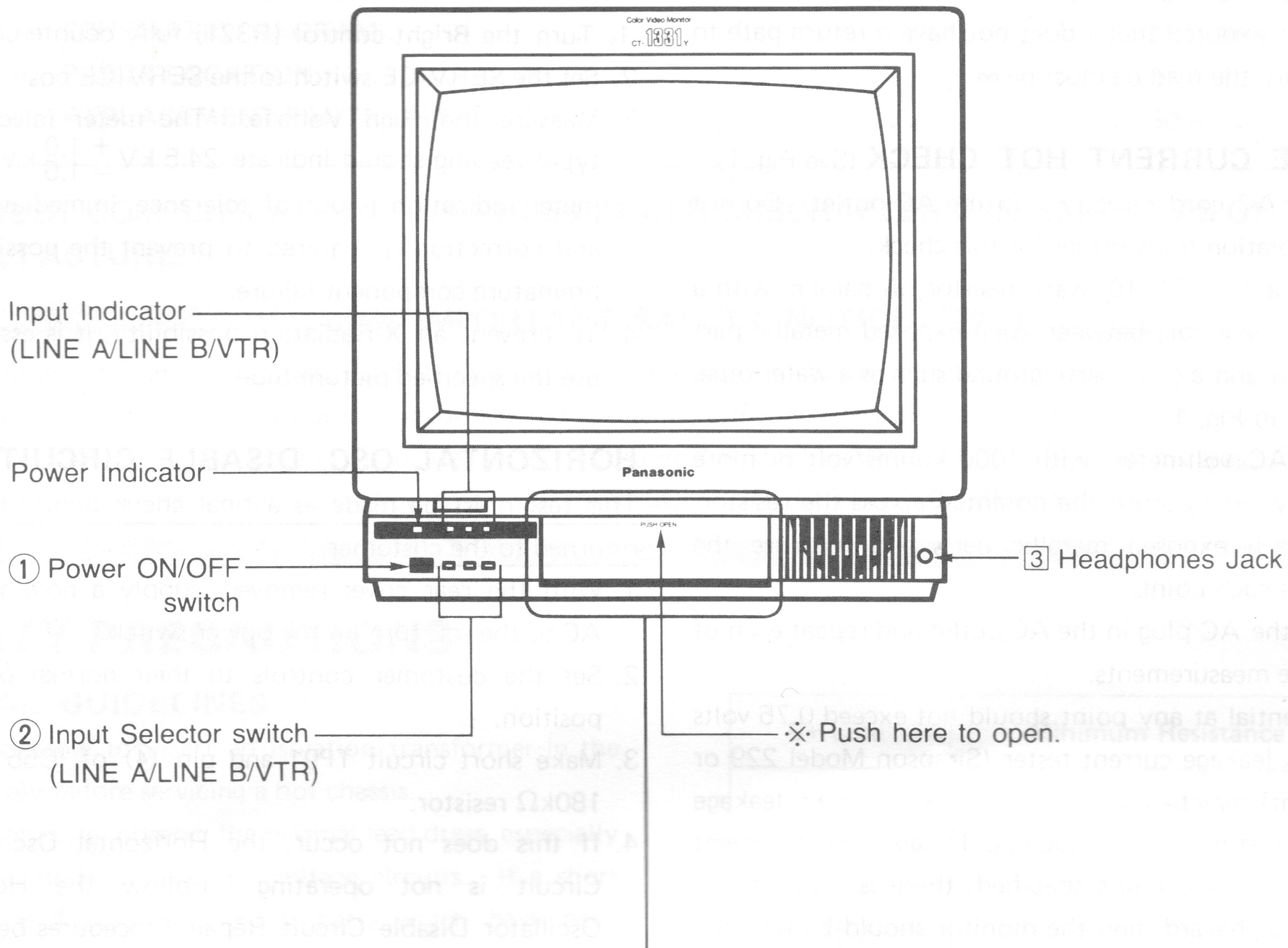

[BEHIND THE DOOR]

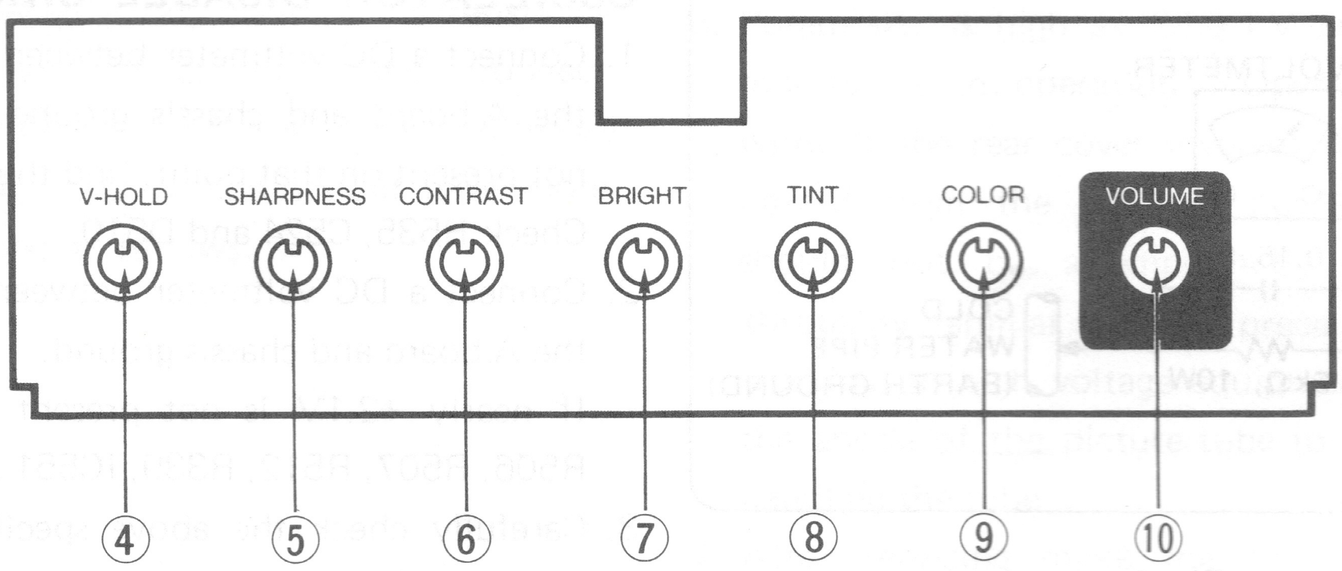

OPERATING INSTRUCTIONS (FRONT)

① POWER ON/OFF Switch	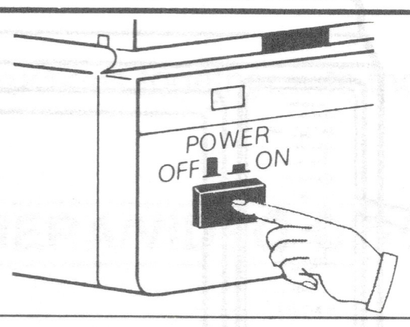 Push to turn the monitor ON (▬). (The Power Indicator will illuminate). Push again to turn the monitor OFF (▬).
② Input Selector Switch	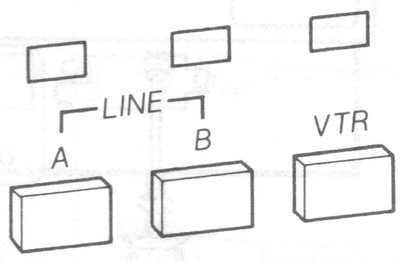 LINE A···Select VIDEO and AUDIO signal inputs to the LINE A terminals. LINE B···Select VIDEO, S-VIDEO and AUDIO signal inputs to the LINE B terminals. VTR····· Select VIDEO and AUDIO signal inputs to the VTR-IN (8 pin) terminal. **Note:** If LINE B is entered, the Video Mode Selector Switch on the back side should also be set in a proper mode for the VIDEO signal entered. (See the page 5 on details)
[3] Headphones Jack	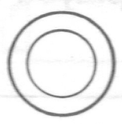 Audio may be monitored from the front of the unit via headphones using this jack.
④ V-HOLD Control	If the picture rolls, as shown , adjust the control Up or Down until it stabilises.
⑤ SHARPNESS Control	Turn clockwise to get a crisper picture. Turn counterclockwise to get a softer picture.
⑥ CONTRAST Control	Adjust the contrast level for the desired overall contrast.
⑦ BRIGHT Control	Adjust the brightness level for the desired overall picture or display brightness.
⑧ TINT Control	Adjust the Tint control for the proper color phase or flesh tone.
⑨ COLOR Control	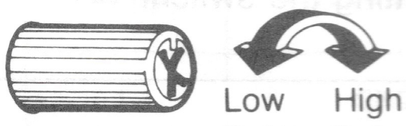 Adjust the Color control to set the color (saturation) level.
⑩ VOLUME Control	Adjust this control for the appropriate audio level. If the audio input is not used turn to minimum.

○ .....Controls
□ .....Terminals

REAR TERMINALS

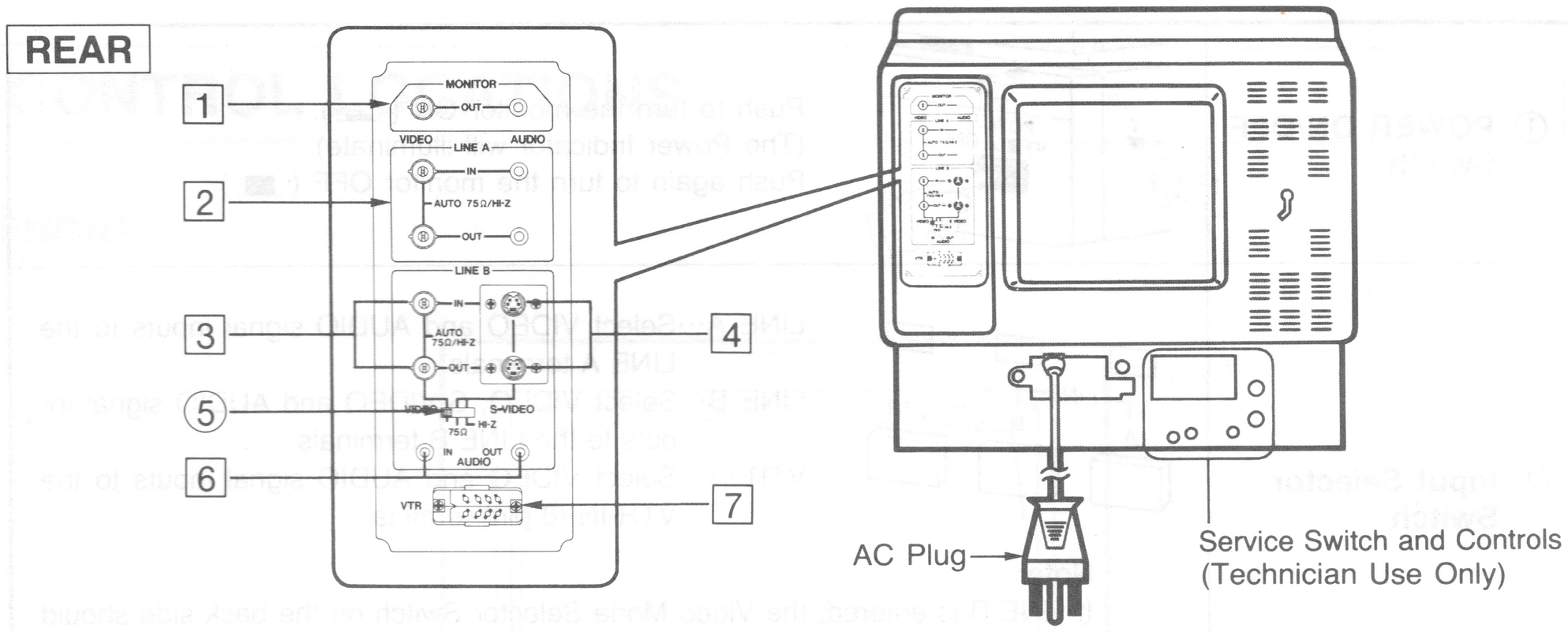

OPERATING INSTRUCTIONS (REAR)

1 **MONITOR OUT Terminals**	Output VIDEO/AUDIO signals being displayed as selected by the input selector switch.
2 **LINE A Terminals**	LINE A VIDEO/AUDIO inputs and outputs for looping through to other video monitors.
3 **LINE B VIDEO IN /OUT Terminals**	LINE B VIDEO input and output for looping through to other video monitors.
4 **S-VIDEO (Separated Y/C signal) IN/OUT Terminals**	This is a terminal to input/output the S-VIDEO signal (4 pins).
⑤ **Video Mode Selector Switch**	This switch selects a video signal to be received. If an ordinary video signal is received, the switch is set on the left side. If the S-VIDEO signal is received, it is set on the center or right side. "75" ·····If the S-VIDEO signal is terminated at this device. "HI-Z" ·····If the S-VIDEO signal is outputted through this device to another monitor. **Note:** Be sure to confirm that the "Input Selector Switch" in front of this device is set in the "LINE B" mode before setting the switch.
6 **LINE B AUDIO IN /OUT Terminals**	LINE B AUDIO input and output for looping through to other video monitors.
7 **VTR (8 pin) Terminal**	Receives and feeds VIDEO/AUDIO signals from/to VTR.

□·····Terminals, ○·····Controls

CONNECTIONS

Note:
Refer to these connection instructions together with the operating manual of the apparatus that is to be connected to this unit.

1 VTR/TUNER/CAMERA/VIDEO DISC Connection

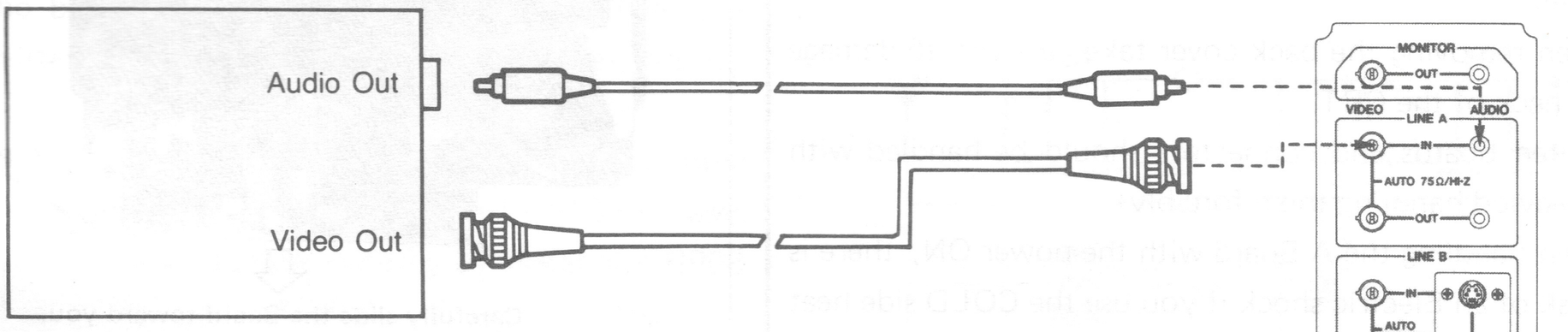

2 S-VIDEO (Separated Y/C signal) Connection

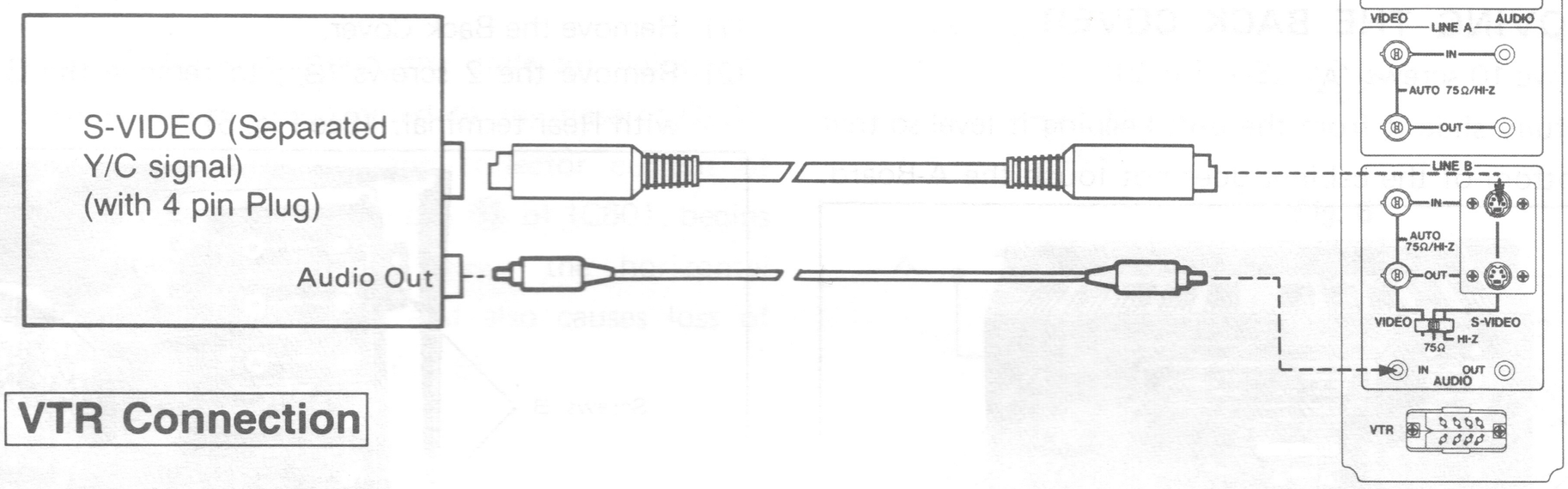

3 VTR Connection

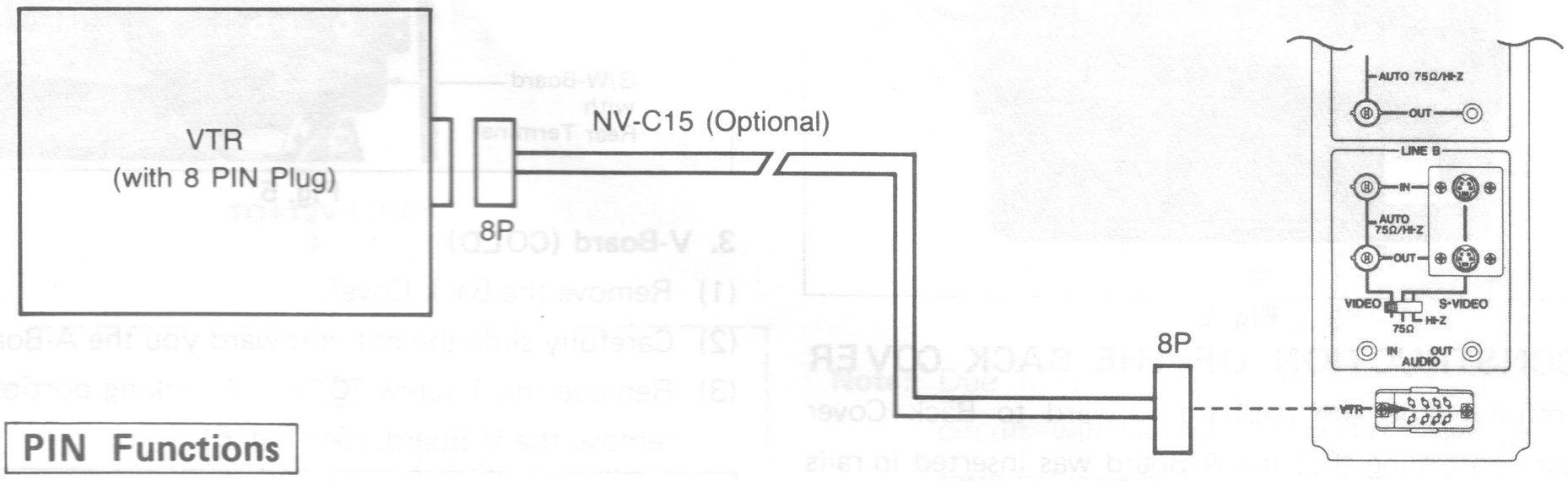

4 PIN Functions

■ S-VIDEO (Separated Y/C Signal, 4 pin) IN/OUT Terminals

PIN NO.	DESCRIPTION	PIN NO.	DESCRIPTION	
			IN Terminal	OUT Terminal
1	GND	3	Y Signal Input	Y Signal Output
2	GND	4	C Signal Input	C Signal Output

■ VTR (8 Pin) Terminal

PIN NO.	DESCRIPTION	PIN NO.	DESCRIPTION
1	AUDIO IN	5	GND
2	VIDEO IN	6	GND
3	GND	7	GND
4	VIDEO OUT	8	AUDIO OUT

DISASSEMBLY INSTRUCTIONS

WARNING:

1. When turning over a P.C. Board to adjust it, be sure to lay on insulating material under it in order to prevent shorting.
2. P.C. Boards and wires should not be pulled forcibly, but be handled carefully.
3. Before disassembly, remove the AC plug from the wall outlet.
4. When removing the back cover take care not to damage the neck of the CRT.
5. Printed boards and connectors should be handled with care-aviod handling them forcibly!.
6. When handling the A-Board with the power ON, there is a risk of an Electric shock if you use the COLD side heat sink while working on the HOT side of the chassis.

PROCEDURE

1. REMOVING THE BACK COVER

(1) Remove 10 screws Ⓐ. (See Fig. 2)

(2) Carefully slide it from the unit keeping it level so that the bottom of the cabinet does not touch the A-Board.

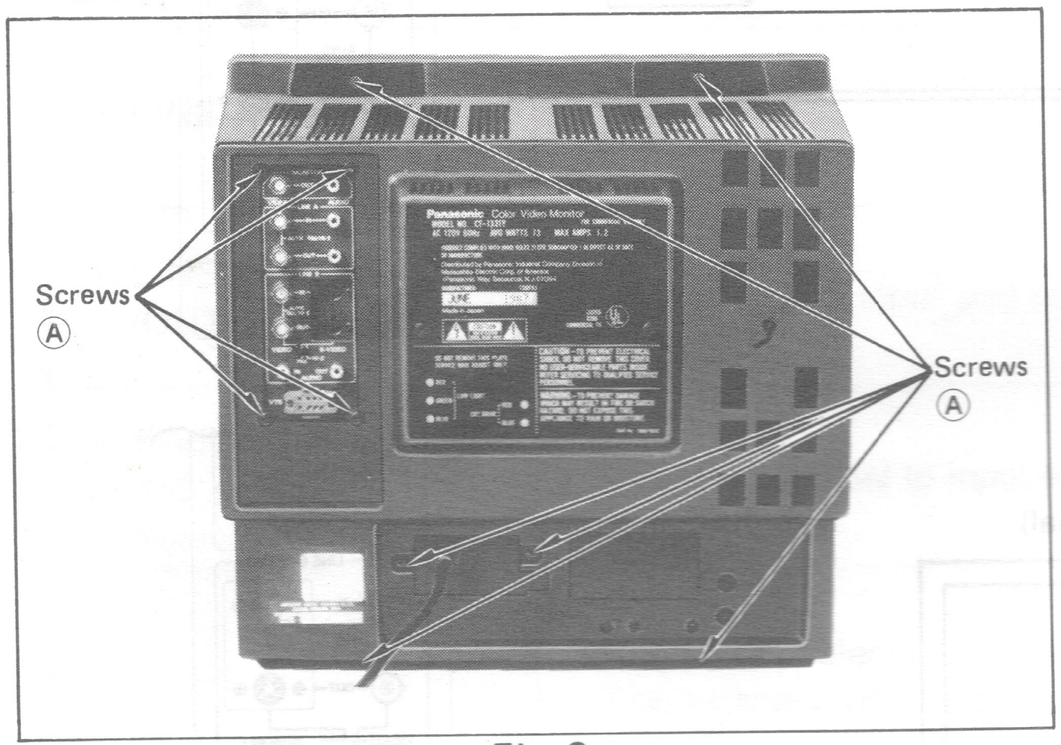

Fig. 2

1-1. CONSTRUCTION OF THE BACK COVER

(1) Carefully slide the A-Board forward to Back Cover after confirming that the A-Board was inserted in rails as shown in Fig. 3.

(2) Tighten the 10 screws Ⓐ (See Fig. 2).

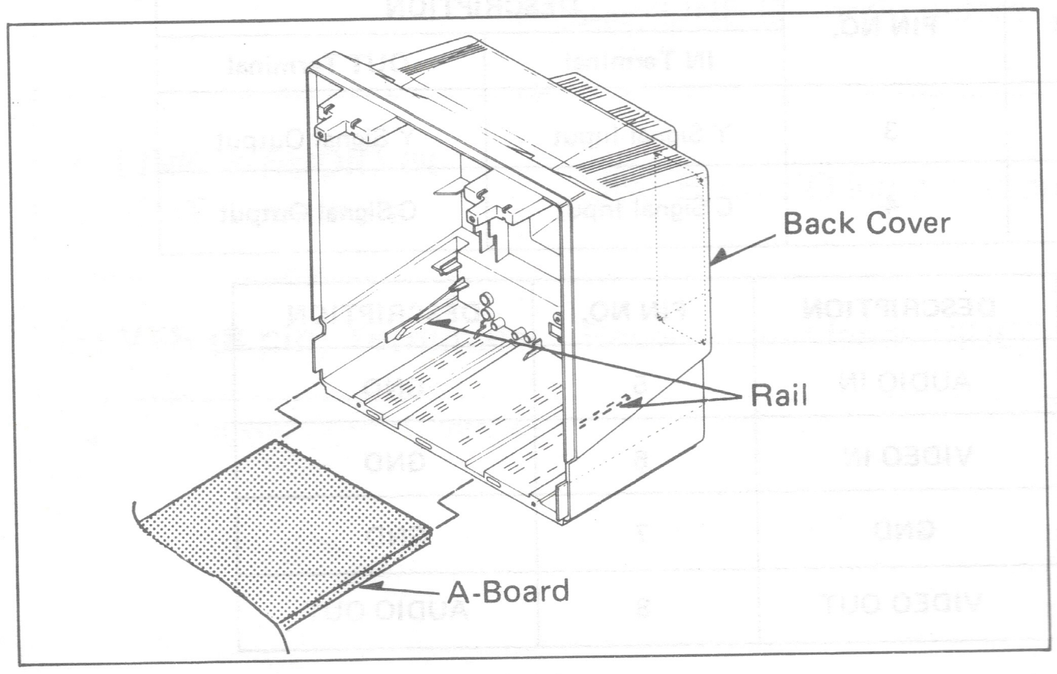

Fig. 3

2. REMOVING THE PRINTED BOARDS

1) A-Board (HOT and COLD)

(1) Remove the Back Cover.

(2) Carefully slide the board toward you and remove the A-Board. (See Fig. 4)

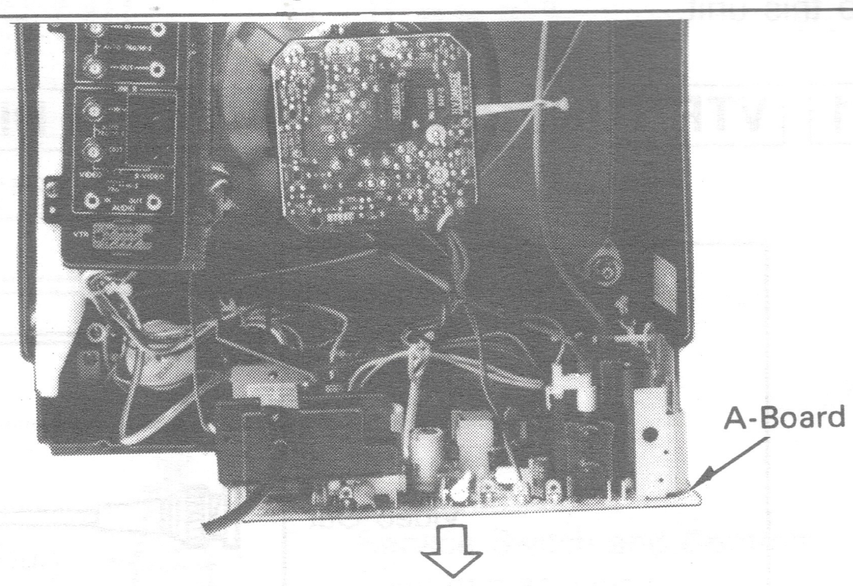

Fig. 4

2) G/W-Board (Hot and COLD) with Rear Terminal

(1) Remove the Back Cover.

(2) Remove the 2 screws Ⓑ, to remove the G/W-Board with Rear terminal. (See Fig. 5)

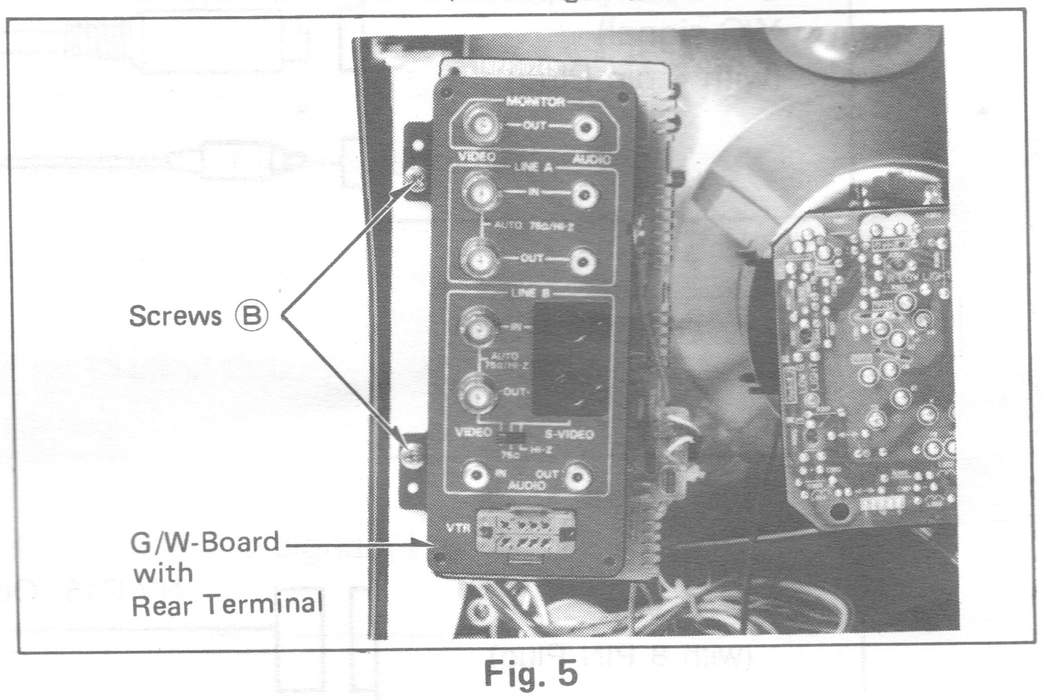

Fig. 5

3. V-Board (COLD)

(1) Remove the Back Cover.

(2) Carefully slide the board toward you the A-Board.

(3) Remove the 1 screw Ⓒ and 4 locking portions Ⓓ to remove the V-Board. (See Fig. 6)

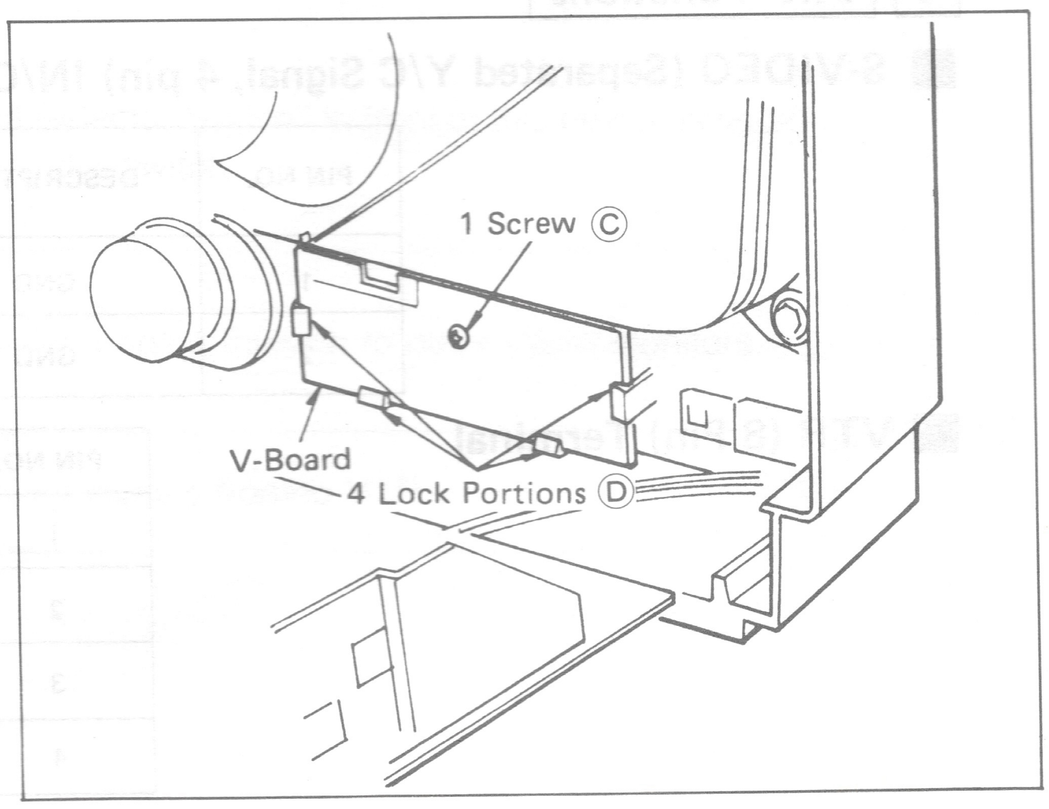

Fig. 6

CIRCUIT EXPLANATION

HORIZONTAL OSCILLATOR DISABLE CIRCUIT

The positive DC voltage supplied from the cathode of D510 for monitoring the high voltage is applied to pin ④ of IC551 through R535 and to the base of Q903 through R909.

The voltage at the emitter of Q903 is regulated by Zener Diode D901. Under normal conditions, the voltage applied across the base and emitter of Q903 is not sufficient to cause emitter current to flow and holds the transistor cut off.

If the high voltage exceeds the specified level, the positive DC voltage supplied from the cathode of D510 increases. The voltage through D510 is dividing by R909 and R908, and applied to the base of Q903. If Veb is nearly more than +0.7V, the transistor Q903 turns on, and the collector voltage of Q903 lowers which is connected to the base of Q902.

Therefore Q902 turns on, and the collector voltage of Q902 increases, which is connected to the base of Q901. Consequently Q901 turns on, and collector current of Q901, which is connected to the pin ㊴ of IC601, begins to flow simultaneously. This causes the horizontal oscillator frequency to increase, and also causes loss of horizontal synchronization. (See Fig. 5)

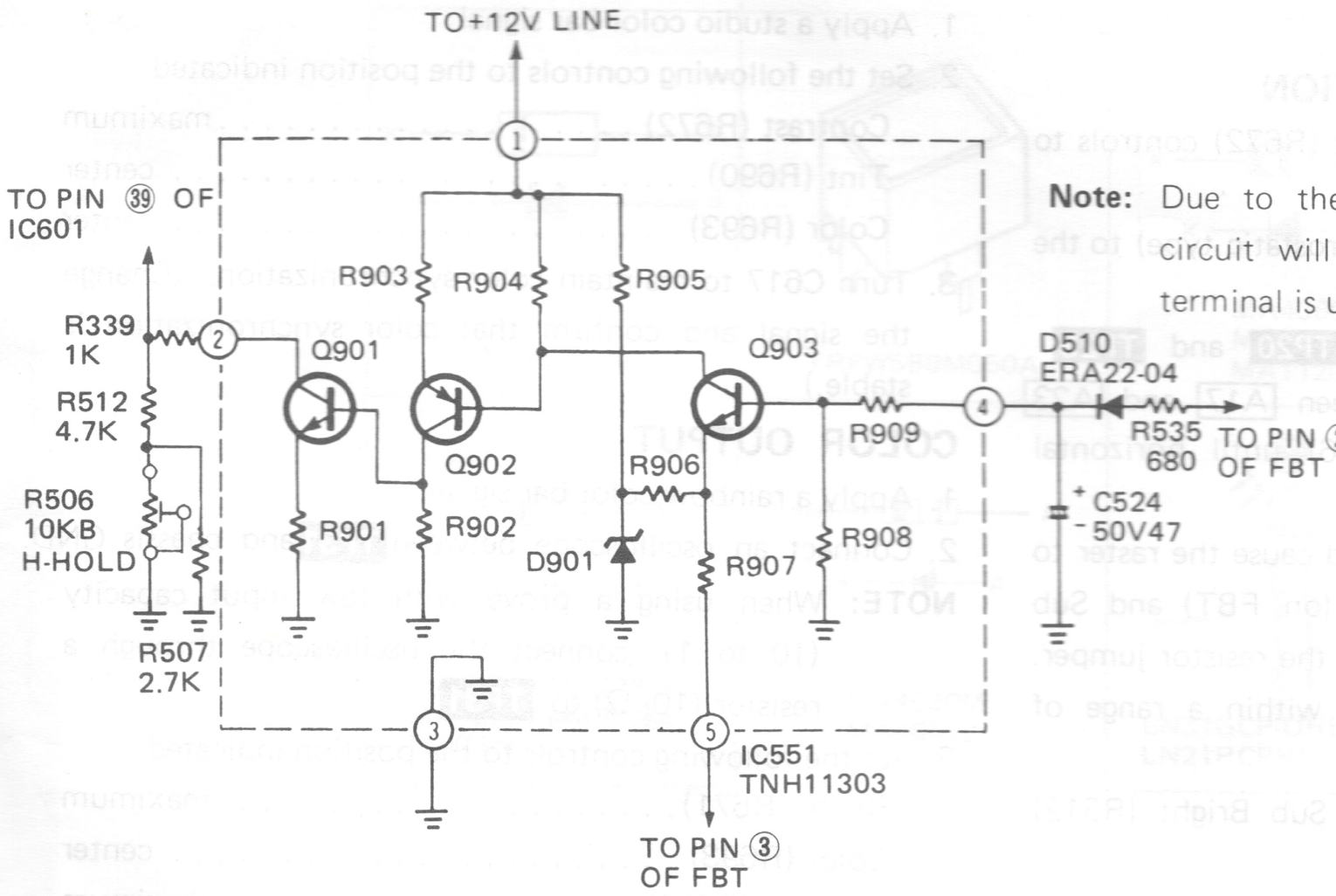

Fig. 5

AUTOMATIC TERMINATION CIRCUIT

When a BNC connector is connected to the video "IN" terminal switch S1 is opened as in (Fig. 6). Since switch S2 remains closed the 75Ω resistor R1 is connected and the circuit operates in the 75Ω terminate mode (Fig. 7).

When a BNC connector is connected to the video "OUT" terminal, switch S2 is opened. With switch S1 and switch S2 open R1 is disconnected and the circuit operates in the "HI-Z" mode (Fig. 8).

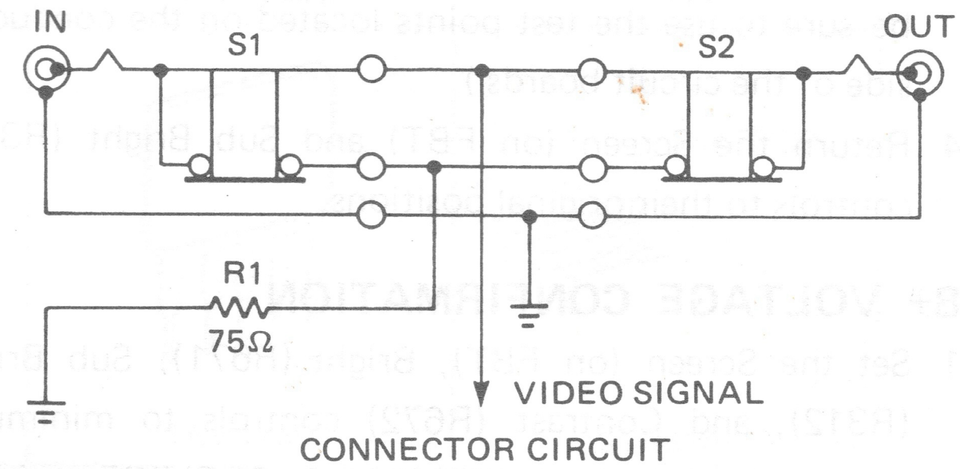

CONNECTOR CIRCUIT

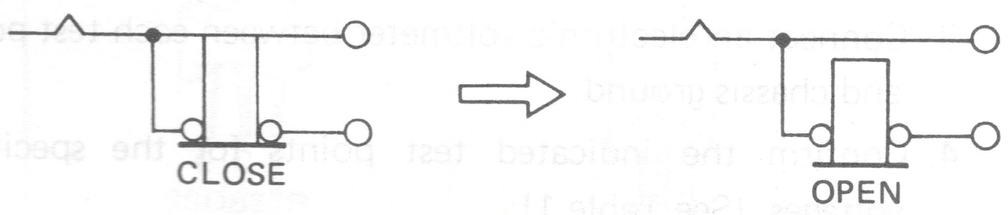

Fig. 6

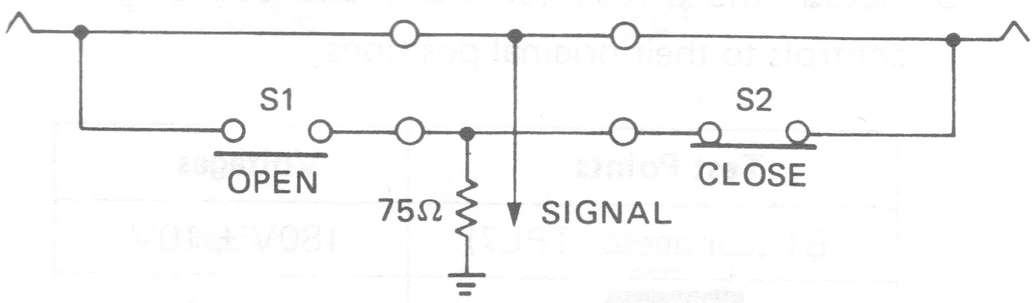

Fig. 7

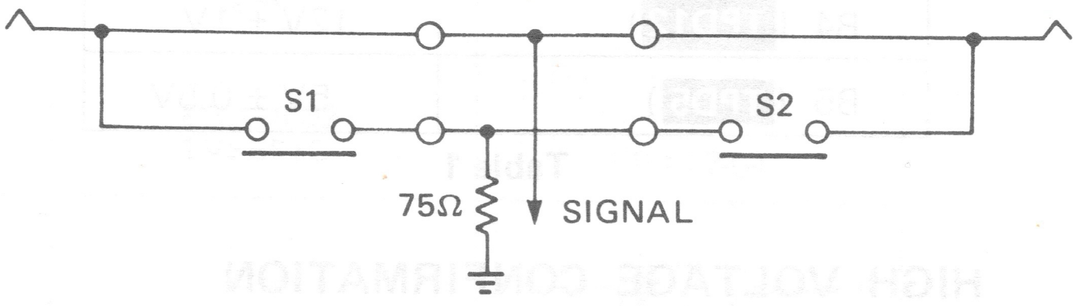

Fig. 8

Note: Due to the switching action of S1 and S2, the circuit will operate properly regardless of which terminal is used for signal input and output.

MEASUREMENTS AND ADJUSTMENTS

Note: 1. Use a Video pattern Generator for the following adjustments. (Video input should read 1.0Vp-p).

B+ VOLTAGE (+115V) ADJUSTMENT

1. Set the Screen (on FBT), Bright (R671), Sub Bright (R312), and Contrast (R672) controls to minimum.
2. Set the service switch (S301) to the SERVICE position.
3. Connect a voltmeter between **TP91** and chassis ground. Adjust R808 (B+ ADJ.) to 115V ± 1.0V.
   (When measuring voltage with an electronic voltmeter, be sure to use the test points located on the conductor side of the circuit boards.)
4. Return the Screen (on FBT) and Sub Bright (R312) controls to their original positions.

B+ VOLTAGE CONFIRMATION

1. Set the Screen (on FBT), Bright (R671), Sub Bright (R312), and Contrast (R672) controls to minimum.
2. Set the Service switch (S301) to the SERVICE position.
3. Connect an electronic voltmeter between each test point and chassis ground.
4. Confirm the indicated test points for the specified voltages (See Table 1).
5. Return the Screen (on FBT) and Sub Bright (R312) controls to their original positions.

Test Points	Voltages
B1 (connector TPL7)	180V ± 10V
B3 (**TPD24**)	25V ± 1V
B4 (**TPD12**)	12V ± 1V
B5 (**TPD5**)	5V ± 0.5V

Table 1

HIGH VOLTAGE CONFIRMATION

1. Set the Bright (R671) and Contrast (R672) controls to minimum.
2. Connect a high voltage meter (electrostatic type) to the 2nd anode of the picture tube.
3. Connect a short jumper between **TP20** and **TP23** Resistor jumper (R5.6kΩ) between A17 and A23 adjust the H-Hold control (R506) until horizontal movement stops.
4. Apply a black and white signal, and cause the raster to disappear by turning the Screen (on FBT) and Sub Bright (R312) controls and remove the resistor jumper.
5. Confirm that the high voltage is within a range of $24.5\ \text{kV}\ ^{+\ 1.0}_{-\ 1.5}\ \text{kV}$.
6. Return the Screen (on FBT) and Sub Bright (R312) controls to their original positions.

AUTOMATIC BEAM LIMITER (ABL) ADJUSTMENT

1. Apply a black and white signal (monoscope pattern).
2. Connect the positive lead of a DC ammeter to **TPD1** (+), and the negative lead to **TPD2** (–).
3. Set the following controls to the positions indicated.
   Sub Bright (R312) . . . . . center
   Bright (R671) . . . . . click
   Contrast (R672) . . . . . maximum
   Color (R693) . . . . . minimum
   Sharpness (R675) . . . . . minimum
4. Adjust the Sub Bright control (R312) for a reading of 600μA on the ammeter.

SUB CONTRAST

1. Apply a crosshatch pattern signal.
2. Connect an oscilloscope between **TP33** and chassis ground.
3. Set the following controls to the positions indicated.
   Sub Bright (R312) . . . . . center
   Bright (R671) . . . . . click
   Contrast (R672) . . . . . maximum
   Input Select Position . . . . . LINE B
   (Rear SW in S-VIDEO position)
4. Adjust the Sub Contrast control (R313) to obtain the waveform at **TP33** as shown in Fig. 9.

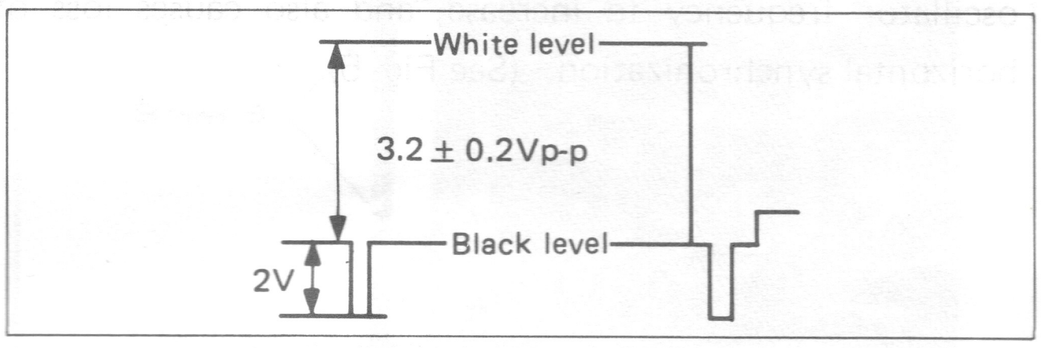

Fig. 9

COLOR HOLD CONTROL ADJUSTMENT

1. Apply a studio color bar signal.
2. Set the following controls to the position indicated.
   Contrast (R672) . . . . . maximum
   Tint (R690) . . . . . center
   Color (R693) . . . . . center
3. Turn C617 to maintain color synchronization. (Change the signal and confirm that color synchronization is stable.)

COLOR OUTPUT

1. Apply a rainbow color bar signal.
2. Connect an oscilloscope between **TP31** and chassis GND.

NOTE: When using a prove with low input capacity (10 to 1), connect the oscilloscope through a resistor (10kΩ) to **TP31**.

3. Set the following controls to the position indicated.
   Bright (R671) . . . . . maximum
   Color (R693) . . . . . center
   Contrast (R672) . . . . . maximum
4. Confirm that the waveform on the oscilloscope as shown in Fig. 10.

5. Turn the Tint control (R690) and confirm that the variable range is more than 30°

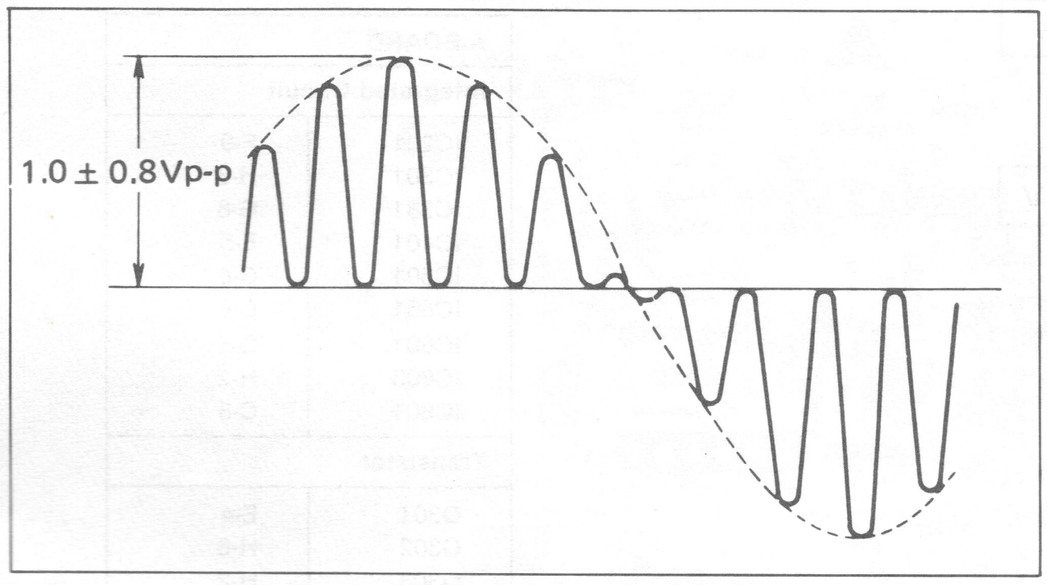

Fig. 10

Note: Before making adjustments as described below, vertical size and focus adjustments must be completed.

COLOR PURITY ADJUSTMENT

(See Fig. 17)

1. Set the Bright (R671) and Sharpness (R675) controls to the maximum positions and V-center (R451) control to the center position.
2. Operate the monitor over 10 minutes.
3. Fully degauss the picture tube by using an external degaussing coil.
4. Apply a crosshatch pattern signal and adjust roughly the static convergence magnets.
5. Apply a black and white signal.
6. Set the Low Light controls as follows.
   R-Low Light (R354) . . . . . minimum
   G-Low Light (R356) . . . . . maximum
   B-Low Light (R355) . . . . . minimum
7. Loosen the deflection yoke clamp screw and move the deflection yoke as close to the purity magnets as possible.
8. Remove the silicone sealer and adjust the purity magnets so that a vertical green field is obtained at the center of the screen.

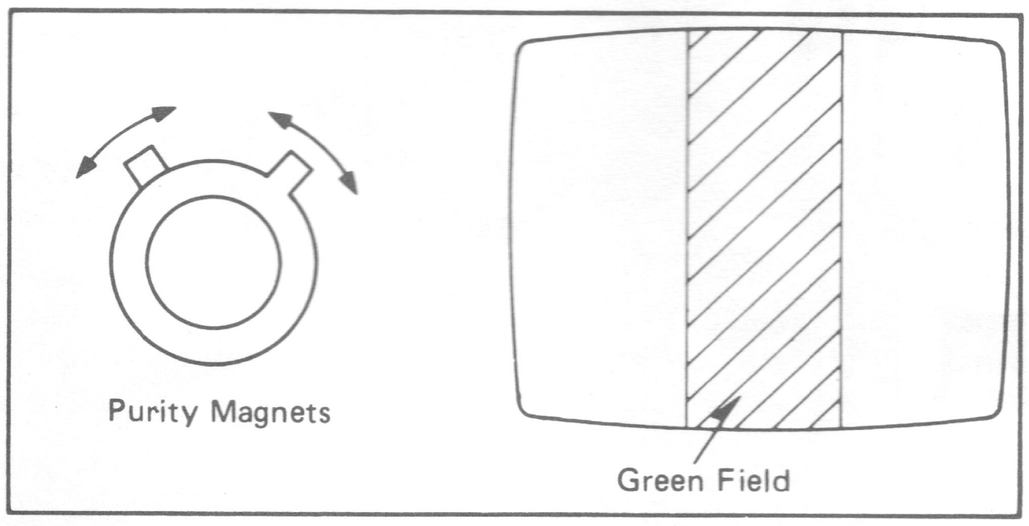

Fig. 11

9. Slowly position the deflection yoke and set it where a uniform green field is obtained.
10. Adjust roughly the Low Light controls and make sure that a uniform white field is obtained.
11. Tighten the deflection yoke clamp screw.

CONVERGENCE ADJUSTMENT

1. Apply a crosshatch pattern signal and Set the Contrast, Control (R672) to the maximum position.
2. Adjust the Bright Control (R671) to obtain a clear pattern.
3. Adjust the Red and Blue lines at the center of the screen by rotating the R-B static convergence magnets. (See Fig. 17)

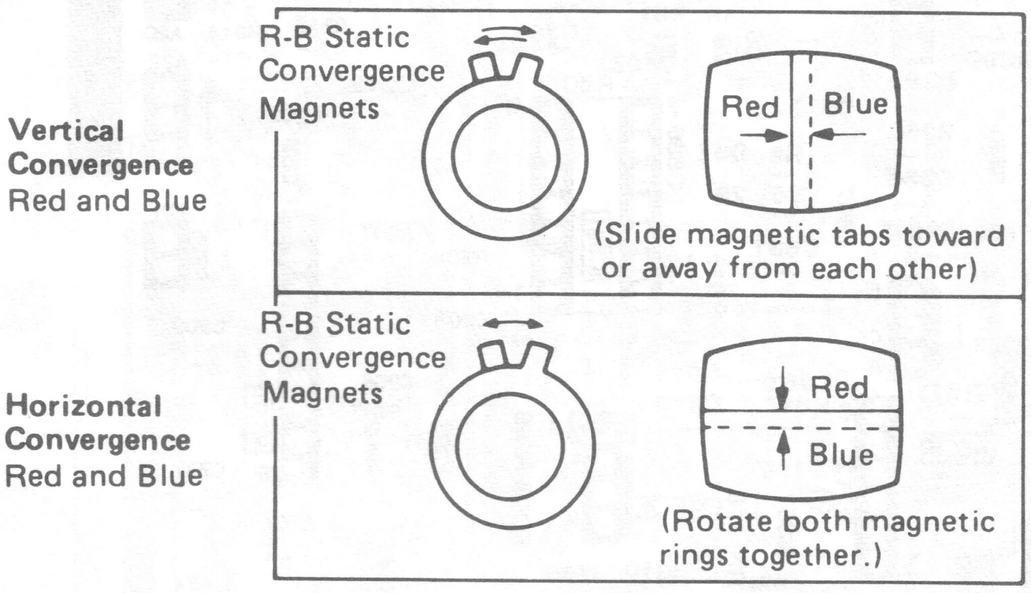

Fig. 12

4. Adjust the Red and Blue lines to the Green line at the center of the screen by rotating the (RB)-G static convergence magnets. (See Fig. 17)
5. Lock the convergence magnets with silicone sealer.
6. Remove the DY wedges (see Fig. 18) and slightly tilt the deflection yoke vertically and horizontally to obtain good overall convergence.

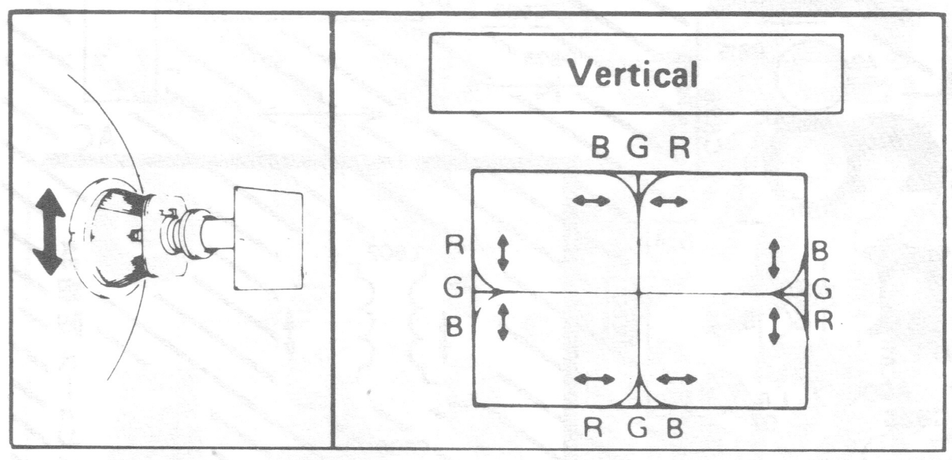

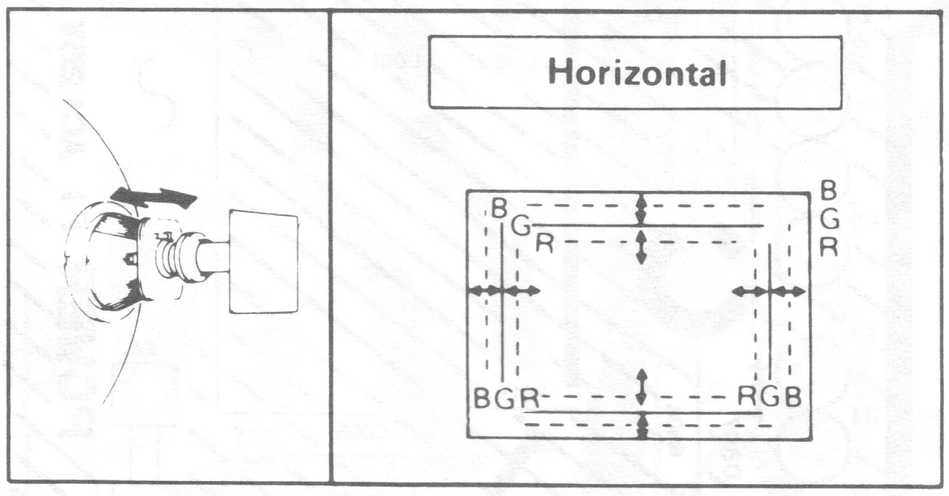

Fig. 13

7. Fix the deflection yoke by reinserting the wedges. (See Fig. 18).
8. If purity error is found, repeat "COLOR PURITY" adjustments.

WHITE BLANCE

1. Apply a black and white signal.
2. Set the following controls to the positions indicated.
   - R-Low Light (R354) . . . . . fully counterclockwise
   - G-Low Light (R356) . . . . . center
   - B-Low Light (R355) . . . . . fully counterclockwise
   - R-Drive (R357) . . . . . center
   - B-Drive (R358) . . . . . center
   - Screen (on FBT) . . . . . fully clockwise
   - Tint (R690) . . . . . center
   - Color (R693) . . . . . minimum
3. Set the Service switch (S301) to the SERVICE position.
4. *Slowly turn the screen (ON FBT) control clockwise* to the point where one of the R, G, B beams just appears on the picture tube.

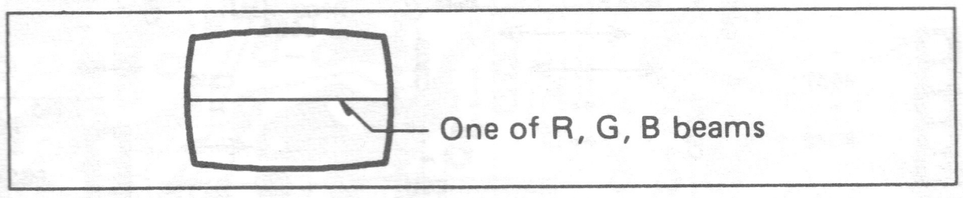

Fig. 14

5. Leave the Low Light control of the color which appeared in item 4 as it is, and turn the remaining Low Light controls clockwise, from the position set at step 2, so as to get a white horizontal line on the picture tube.

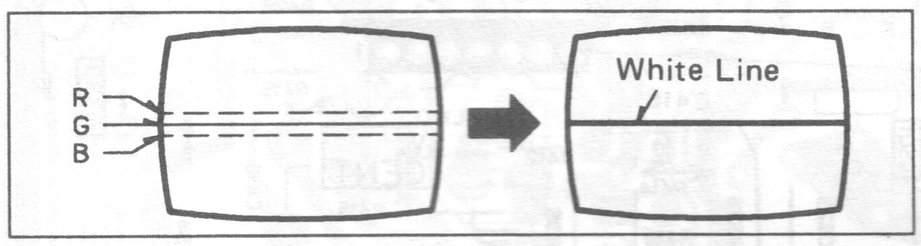

Fig.15

6. Reset the Service switch (S301) to the NORMAL position.
7. Confirm the white balance according to following flow chart. (See Fig. 16).

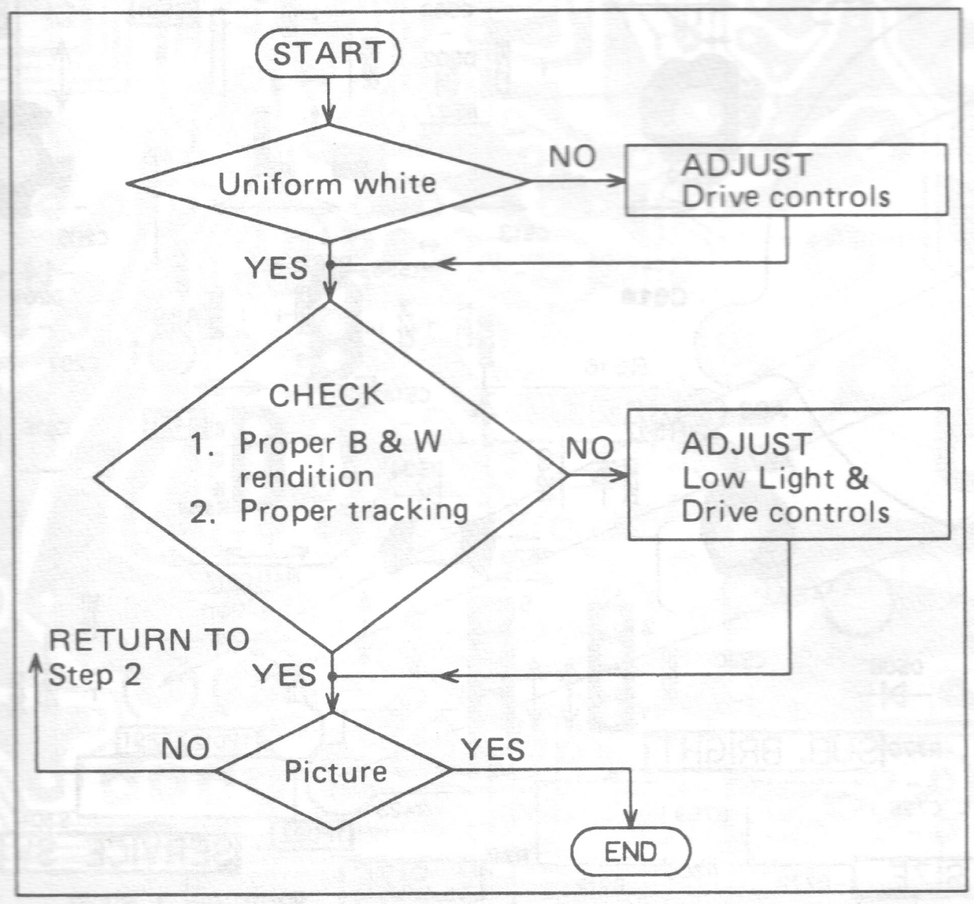

Fig. 16

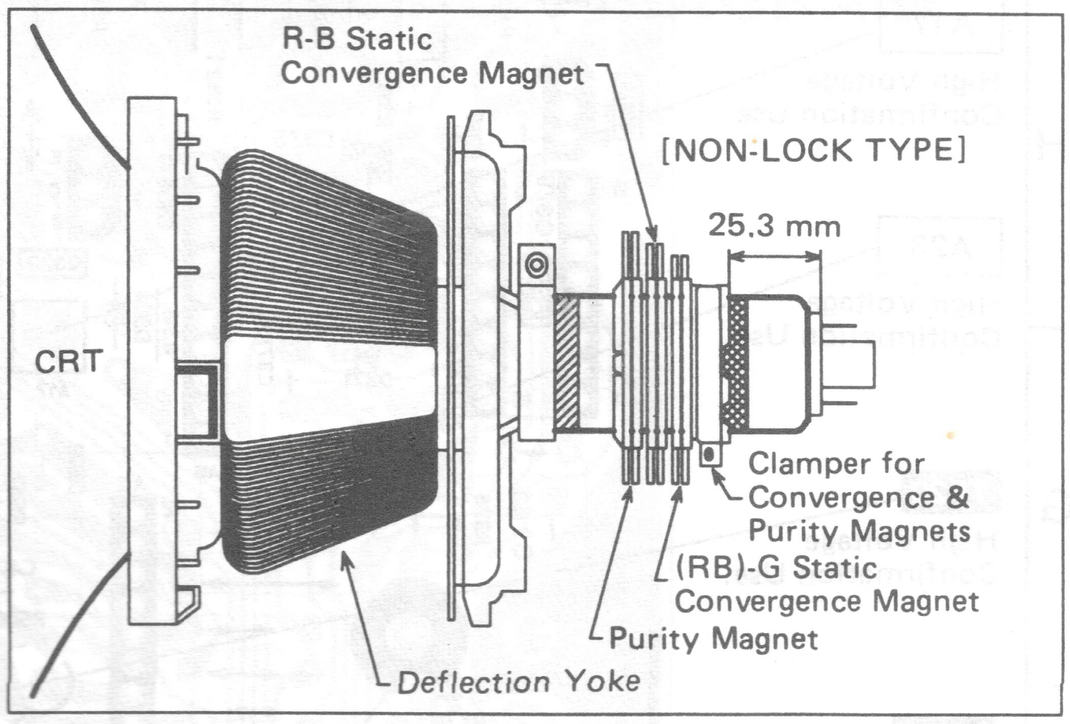

Fig. 17

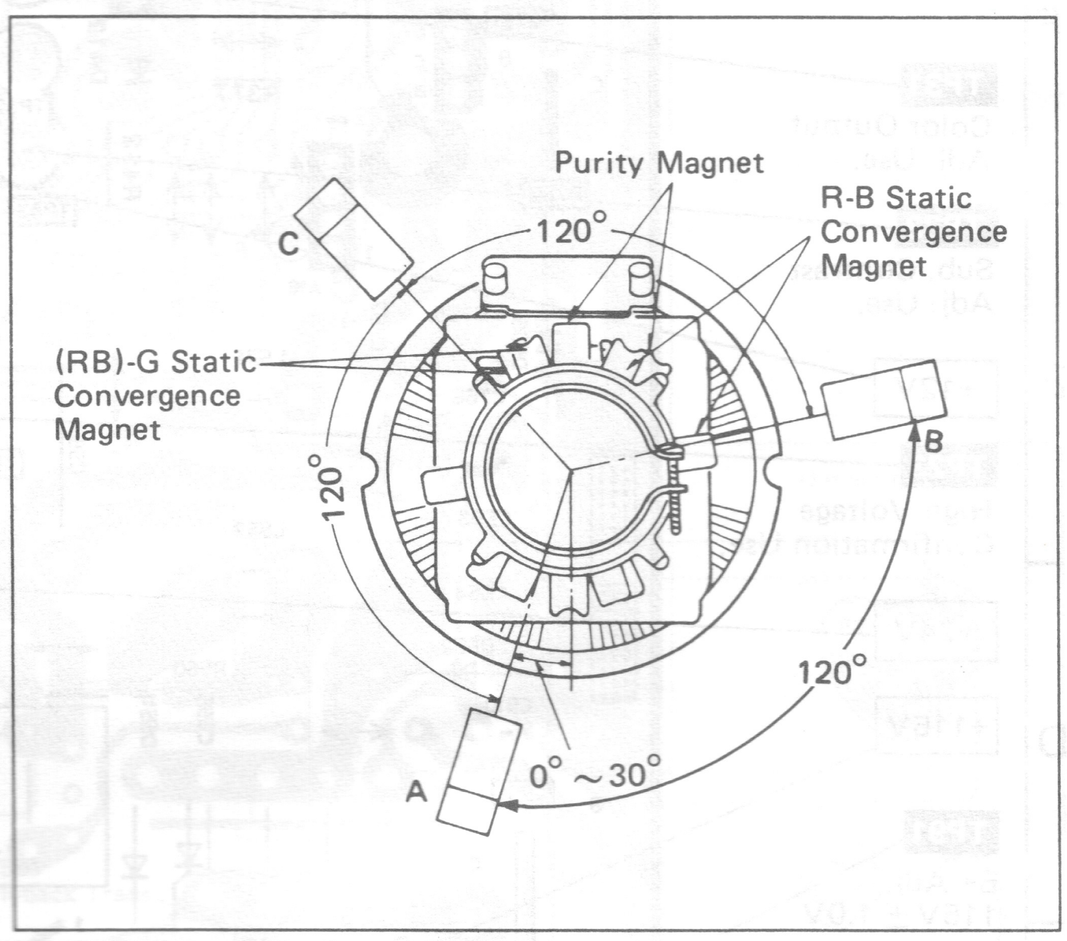

Fig.18

Notes:

1. Wedge A shown in Fig. 18 should be fixed within a range of 0° ~ 30° to the left of the vertical line as shown.
2. After inserting wedge A, insert wedges B, C and D. The wedges should be set 90° apart from each other.
3. Be certain that the four wedges are firmly fixed and the Deflection Yoke is tightly clamped in place. Otherwise the Deflection Yoke may shift it position and cause a loss of convergence and purity.

LOCATION OF TEST POINTS AND CONTROLS

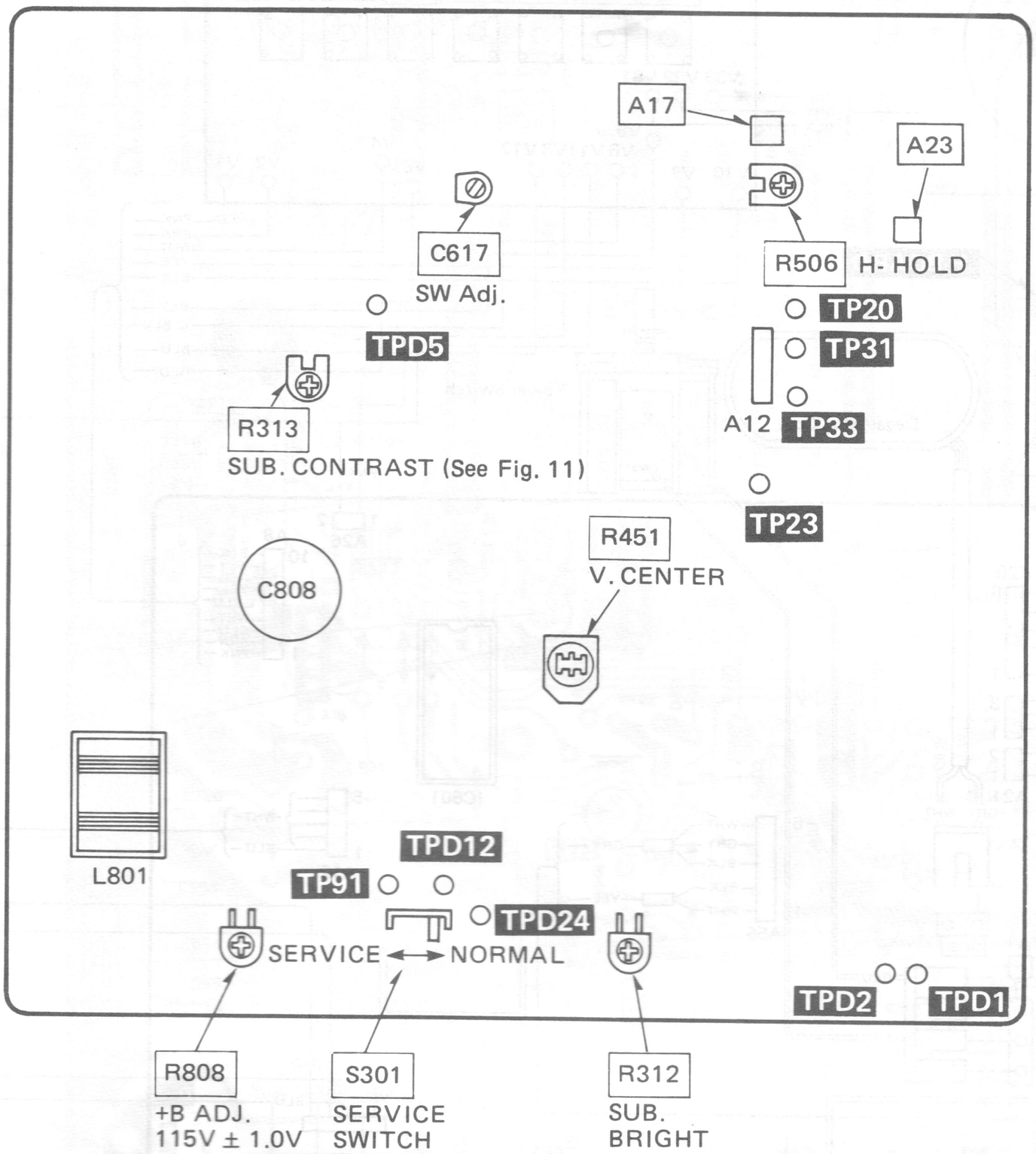

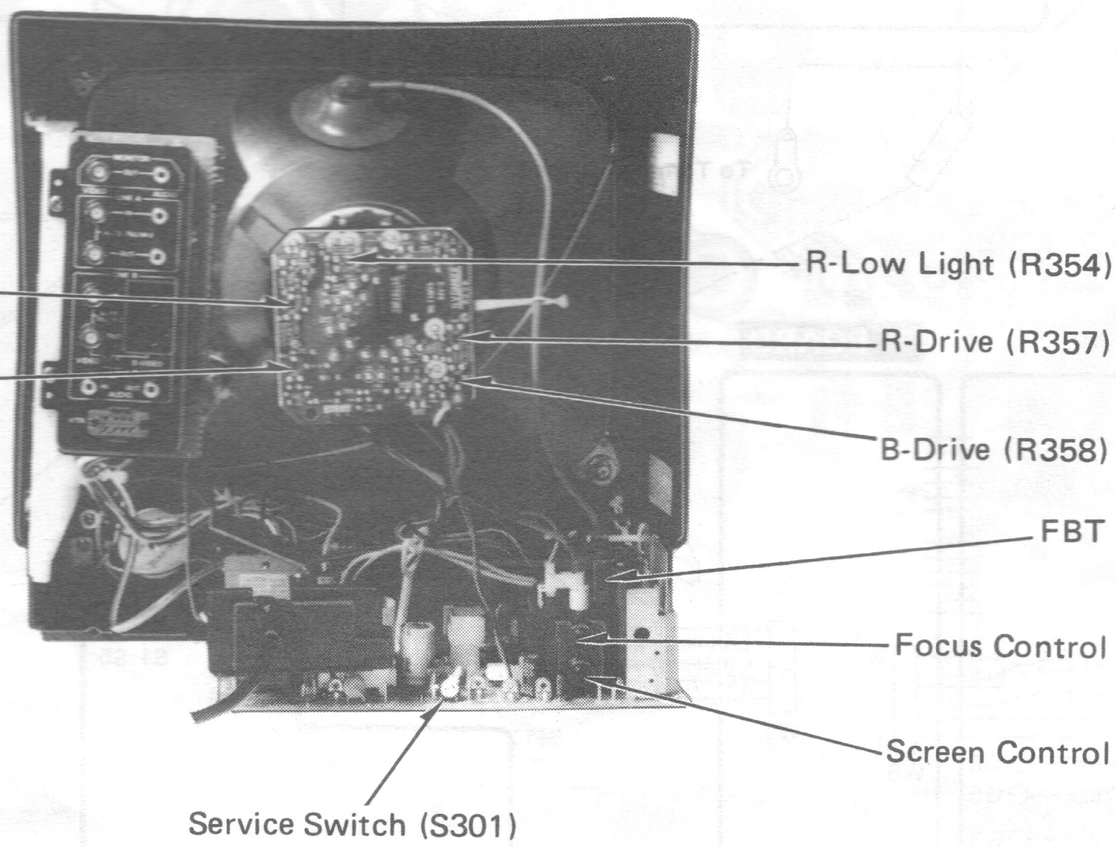

CIRCUIT BOARD AND WIRING CONNECTION DIAGRAM

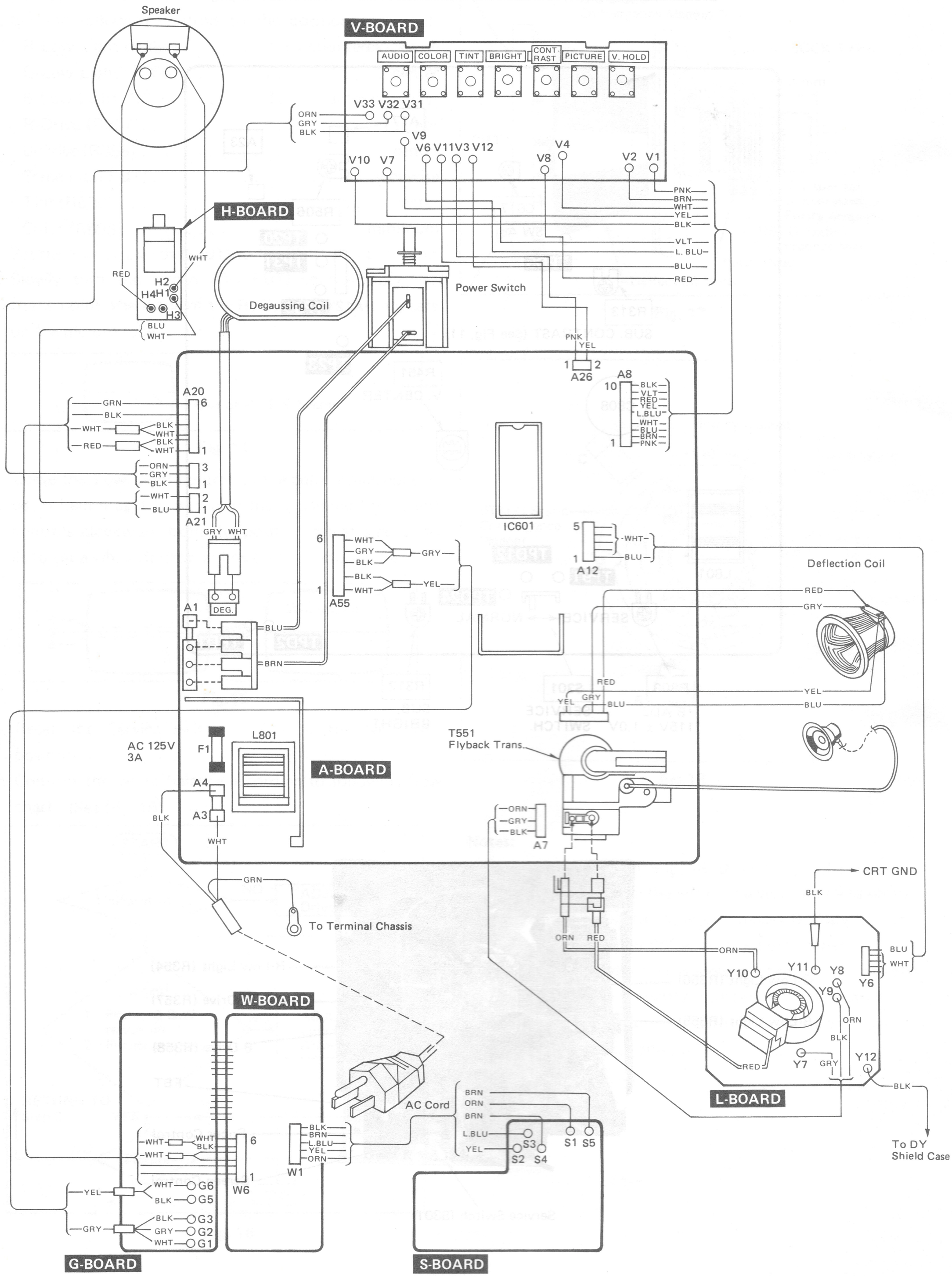

A-BOARD TNP890104AB

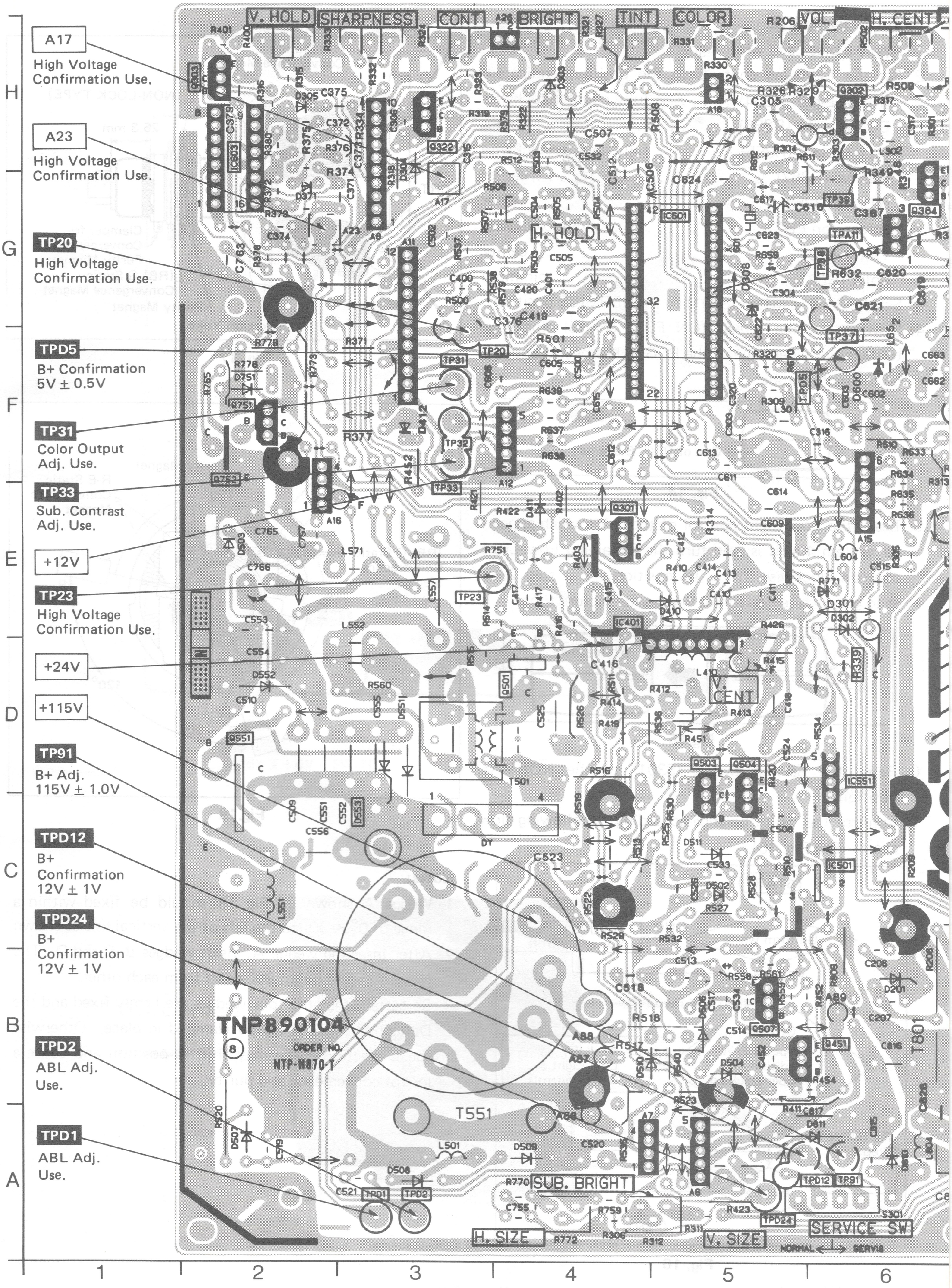

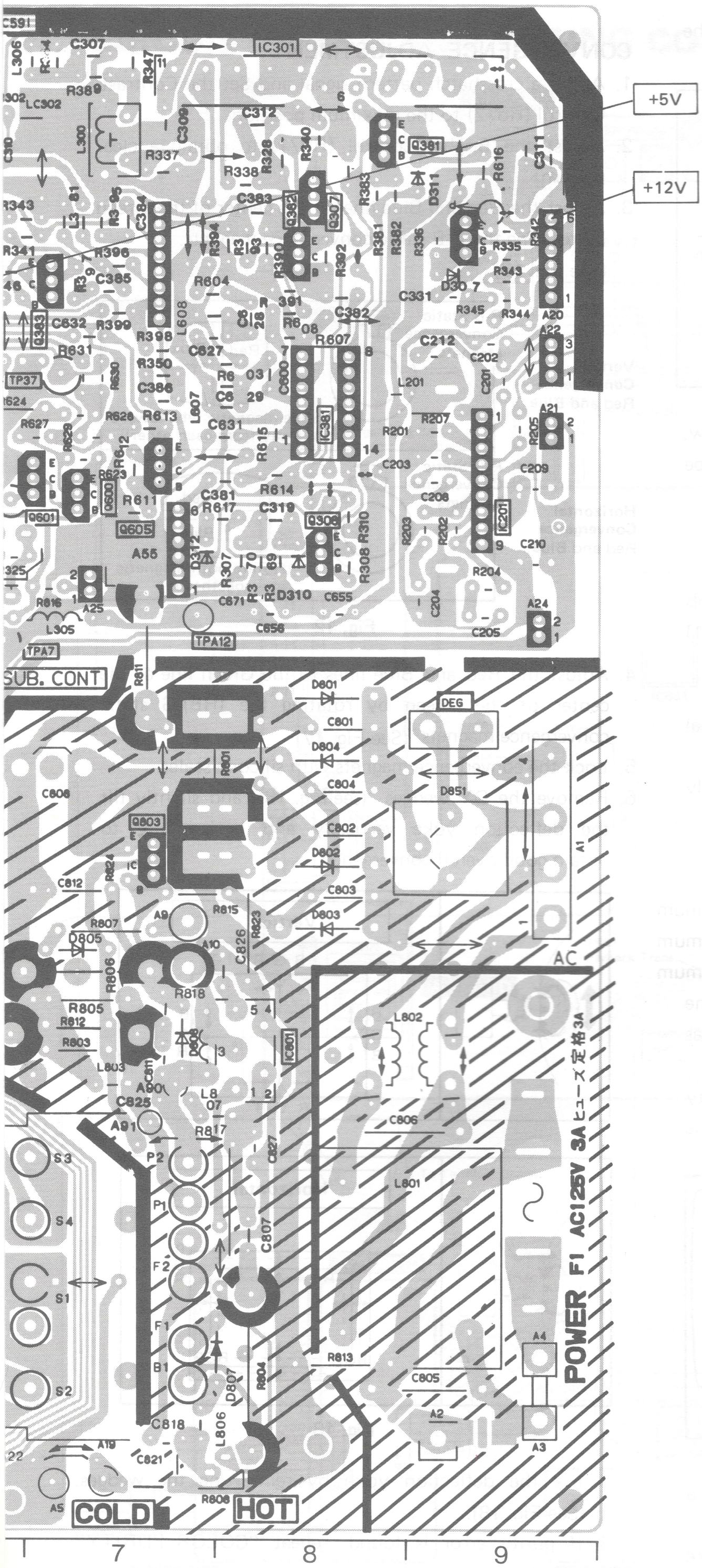

A-BOARD	
Integrated Circuit	
IC201	F-9
IC301	H-8
IC381	G-8
IC401	E-5
IC501	C-6
IC551	D-6
IC601	G-5
IC603	H-2
IC801	C-8
Transistor	
Q301	E-4
Q302	H-6
Q303	H-2
Q307	H-8
Q308	F-8
Q321	H-9
Q322	H-3
Q381	H-9
Q501	D-4
Q503	D-5
Q504	D-5
Q551	D-2
Q751	F-2
Q752	F-2
Q803	D-7
VR	
R312	A-5
R313	F-6
R423	A-5
R451	D-5
R506	H-4
R772	A-4
R808	A-8
TP	
TPA5	A-7
TPA7	E-6
TPA11	G-6
TPD1	A-3
TPD2	A-3
TPD5	F-6
TPD12	A-6
TPD24	A-5
TP20	G-3
TP23	E-4
TP31	F-3
TP32	F-3
TP33	F-3
TP37	G-6
TP38	G-6
TP91	A-6

ADDRESS INFORMATION

W-BOARD TNP800246ZA
G-BOARD TNP800245ZA

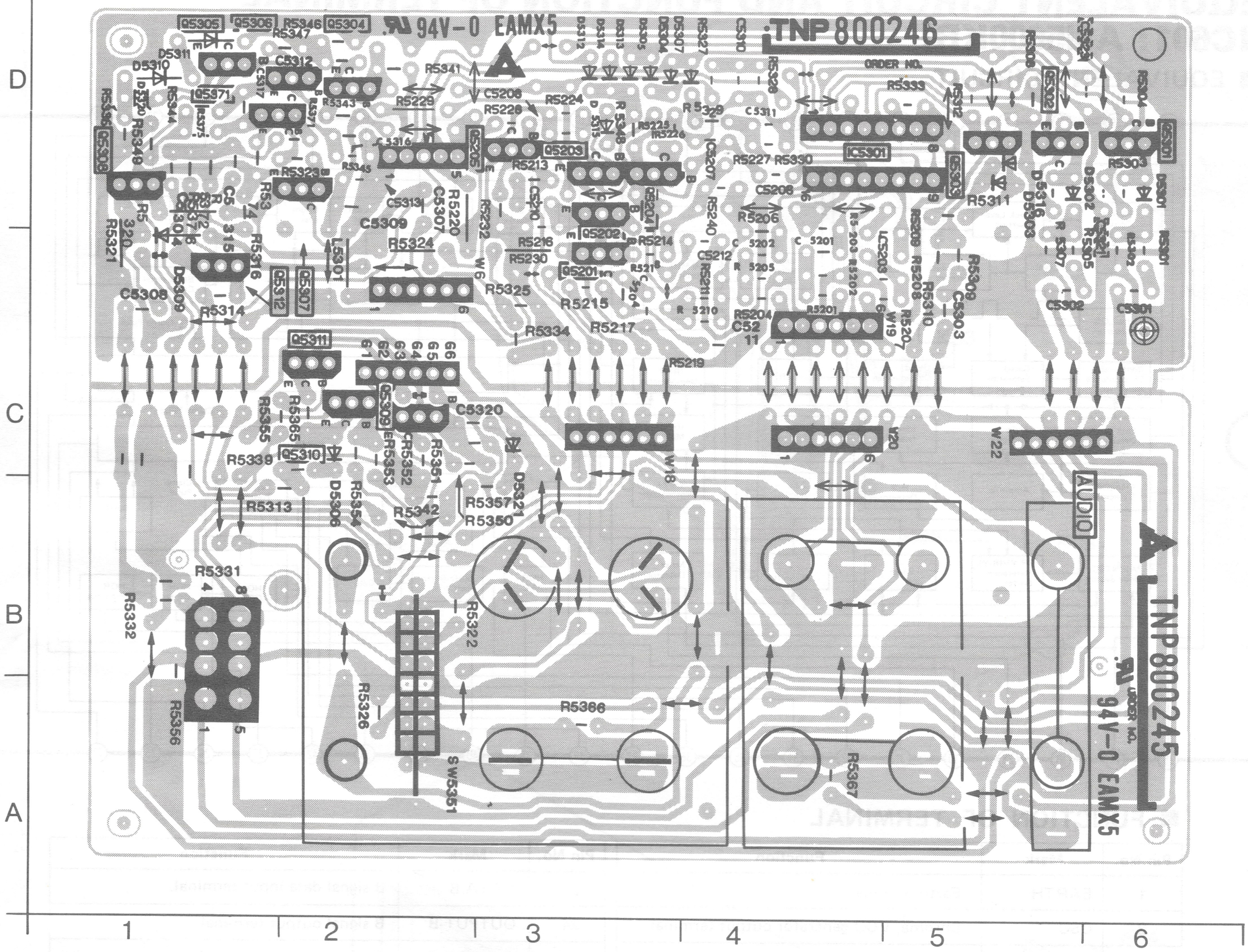
TNP800246
94V-0 EAMX5
ORDER NO.
TNP800245
AUDIO
94V-0 EAMX5
Q5305
Q5306
R5346
Q5304
R5347
D5311
D5310
C5312
Q5371
R5341
R5343
R5229
C5206
R5224
R5228
R5225
R5226
R5213
Q5203
Q5205
C5316
R5345
R5329
C5313
C5309
R5324
R5220
R5232
C5307
R5216
R5230
Q5202
Q5201
R5214
R5215
R5325
R5334
R5217
R5219
C5308
R5314
Q5312
Q5307
L5301
D5309
R5316
R5315
R5321
R5320
R5319
R5349
R5348
R5344
R5327
R5328
C5310
R5330
R5333
C5311
R5227
C5207
R5240
C5208
R5206
C5212
R5211
R5210
R5204
C5211
R5201
C5202
C5201
C5205
C5204
C5203
R5203
R5202
R5208
R5207
R5310
R5309
C5303
W19
W20
W22
W18
C5320
Q5311
Q5310
R5339
R5355
R5365
R5313
R5353
R5352
R5351
R5354
R5342
D5306
D5321
R5357
R5350
R5331
R5332
R5356
R5326
R5322
SW5351
R5366
R5367
R5302
R5304
R5305
R5307
R5312
R5301
C5301
C5302
D5303
D5316
R5311
R5303
Q5302
Q5303
Q5301
R5308
R5309
R5310
R5312
R5313
R5314
R5315
R5316
R5317
R5318
R5319
R5320
R5321
R5322
R5323
R5324
R5325
R5326
R5327
R5328
R5329
R5330
R5331
R5332
R5333
R5334
R5335
R5336
R5337
R5338
R5339
R5340
R5341
R5342
R5343
R5344
R5345
R5346
R5347
R5348
R5349
R5350
R5351

L-BOARD TNP100150BA

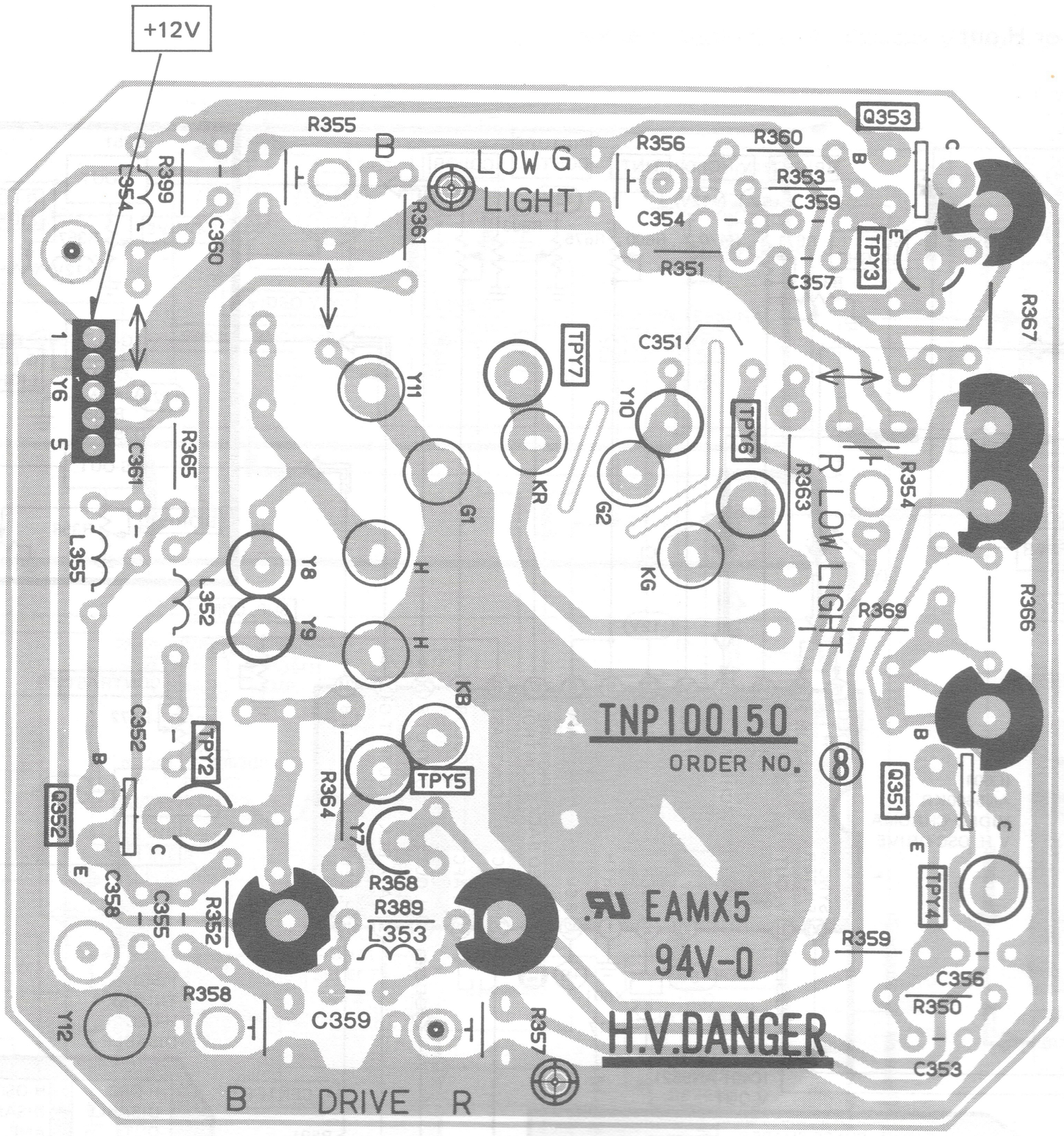

V-BOARD TNP800266ZA

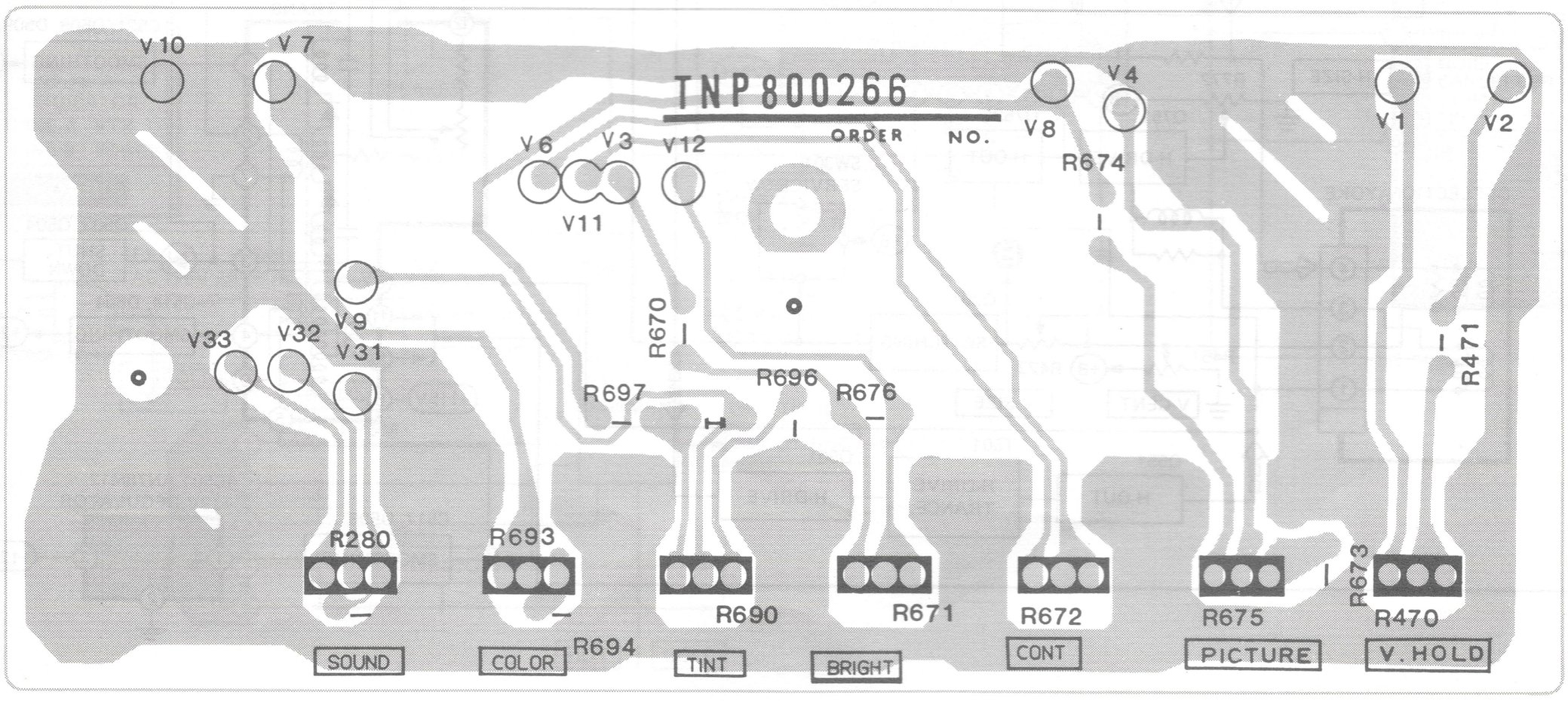

TERMINAL GUIDE OF IC'S, TRANSISTORS, DIODES

<table>
<tr>
<td> 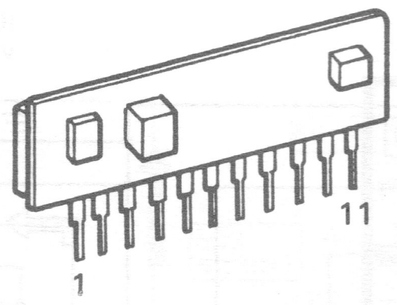

TNH11401BZ</td>
<td> 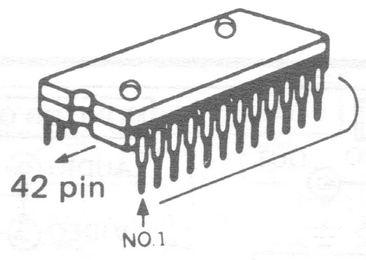

AN5600KR</td>
<td> 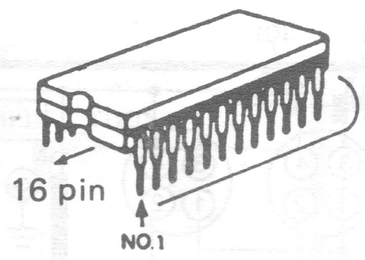

AN5650
TVSTC4052BP</td>
<td> 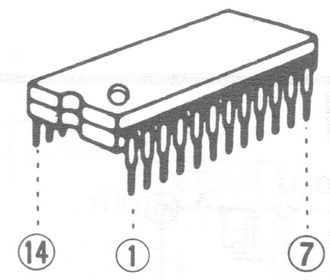

TC4066BP</td>
</tr>
<tr>
<td> 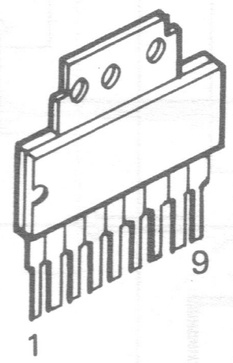

AN5265</td>
<td> 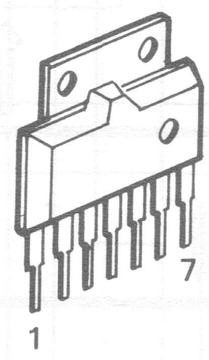

AN5521</td>
<td> 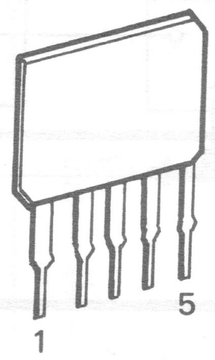

TNH11303</td>
<td> 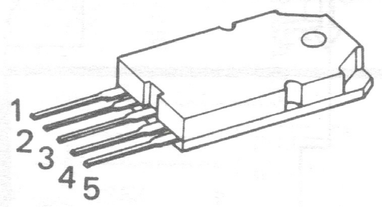

STR53041</td>
</tr>
<tr>
<td> 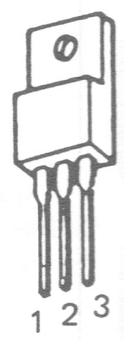

AN78M12</td>
<td>

2SC3063 2SC1753AH</td>
<td> 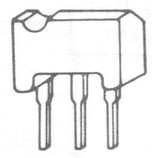

2SD637R
UN1215
2SD636R
2SD638-R
2SB642Q
2SB641R</td>
<td>

2SD965</td>
</tr>
<tr>
<td> 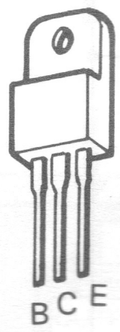

2SD1441</td>
<td> 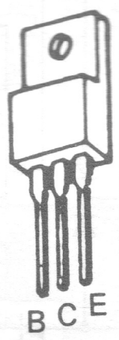

2SD401A</td>
<td> 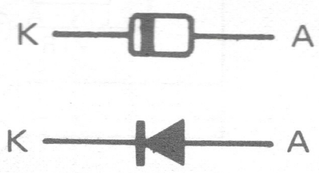

ERA15-02
TVSES1C</td>
<td> 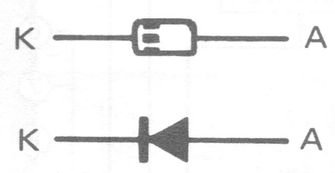

ERA22-04</td>
</tr>
<tr>
<td> 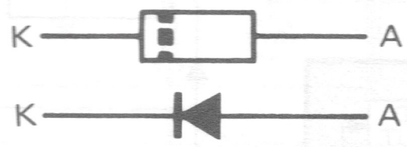

TVSB2404C</td>
<td> 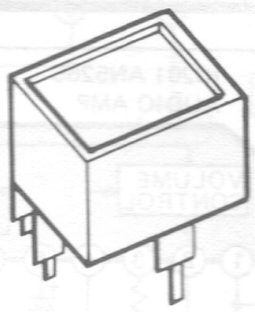
TRPW5B0M050A</td>
<td> 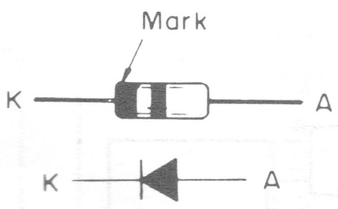

MA4360L
MA4120
MA1120H</td>
<td> 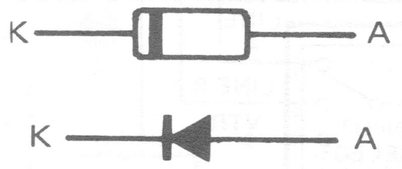

TVSC2715M
TVSRM10B
TVSRG2
TVSSR2KN
TVSES1</td>
</tr>
<tr>
<td> 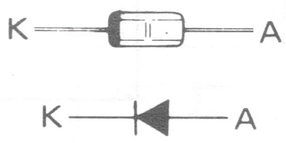

MA165, MA27T-A
MA167, MA27WA
MA27W</td>
<td> 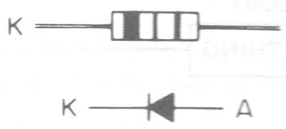

MA4030M
MA4051L</td>
<td>
LN31GCP-UHL (Green)
LN21RCPHL (Red)</td>
<td> 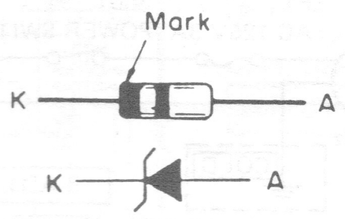

MA4043H
TVSQA209M4</td>
</tr>
</table>

BLOCK DIAGRAM

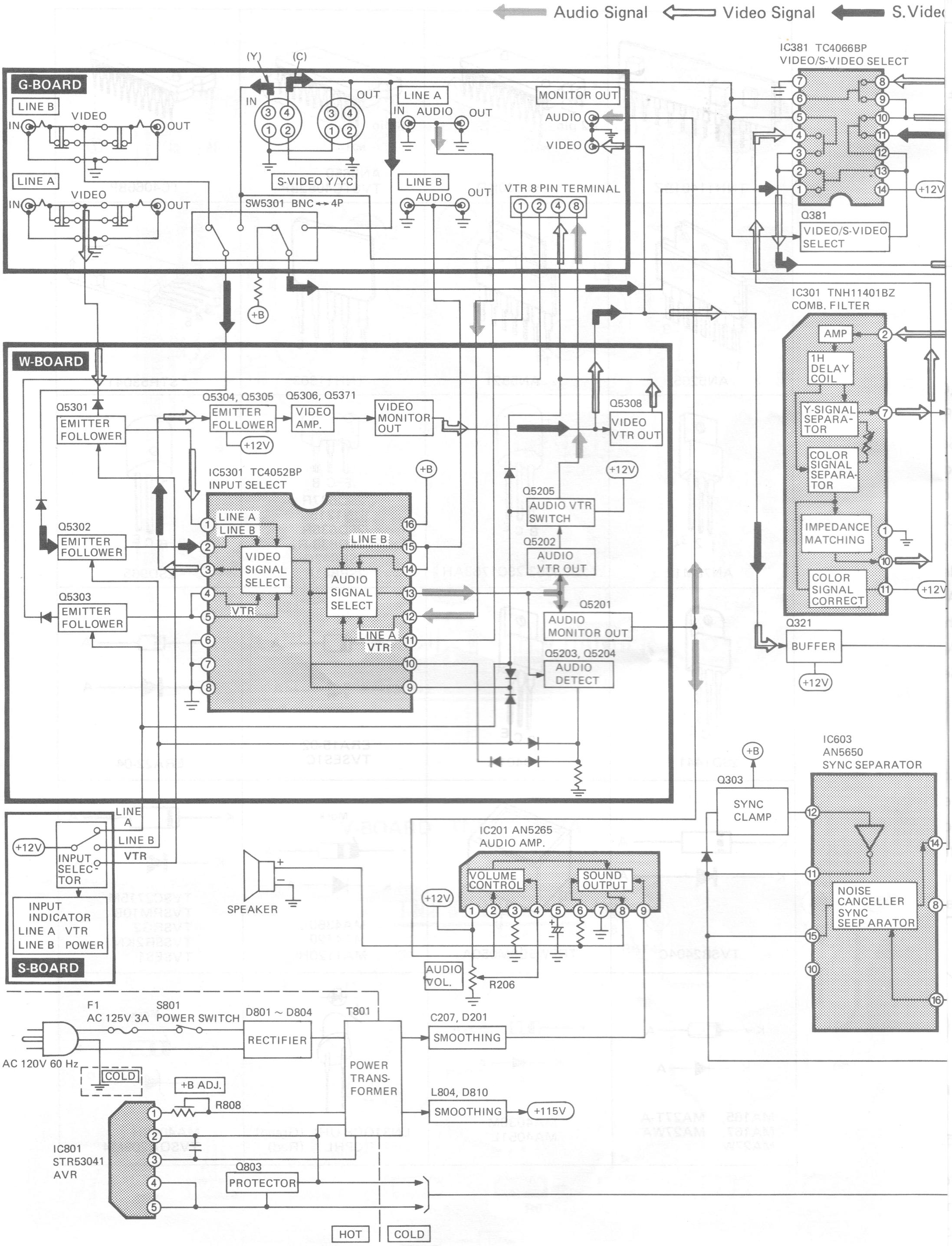

› Signal ◁ooooo V or H out

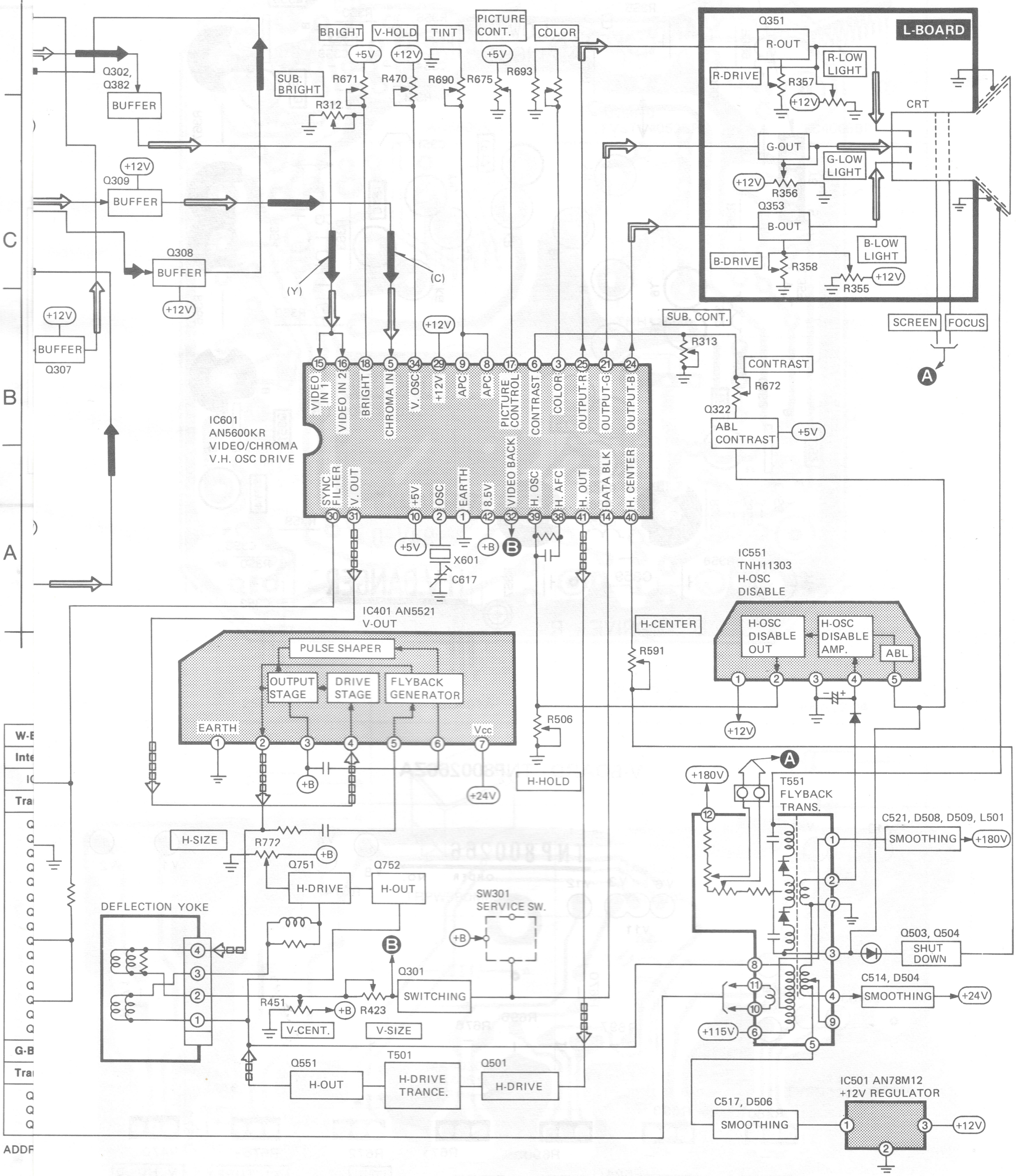

EQUIVALENT CIRCUIT AND FUNCTION OF TERMINAL (IC601: AN5600KR)

■ EQUIVALENT CIRCUIT

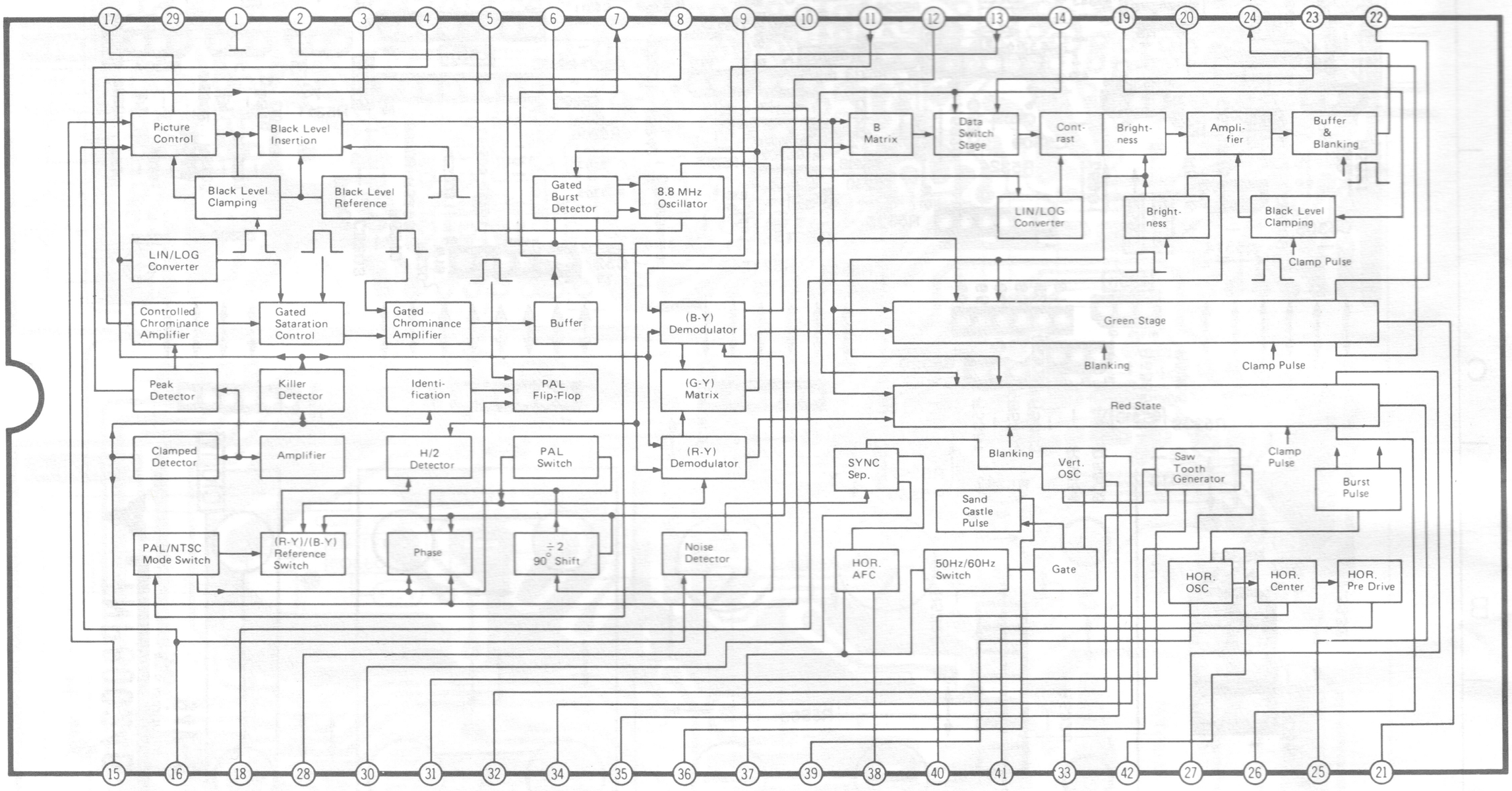

■ FUNCTION OF TERMINAL

Pin No.	Mark	Function
1	EARTH	Earth terminal.
2	OSC	Chroma, VCO generator output terminal.
3	COLOR	Color control terminal.
4	ACC	ACC filter terminal.
5	CHROMA IN	Chroma, signal input terminal.
6	CONTRAST	Contrast control terminal.
7	———	Not used.
8	APC	Phase detection terminal.
9	APC	Phase detection terminal.
10	5V	Apply +5V.
11	———	Not used.
12	COLOR KILLER	Color killer filter terminal.
13	———	Not used.
14	DATA BLK	Data blanking terminal.
15	VIDEO IN 1	Video signal input terminal.
16	VIDEO IN 2	Video signal input terminal.
17	PIX	Picture control terminal.
18	BRIGHT	Brightness control terminal.
19	CLAMP-B	Clamp (B) terminal.
20	CLAMP-G	Clamp (G) terminal.
21	OUTPUT-G	G signal output terminal.
22	DATA-G	G signal data input terminal.

Pin No.	Mark	Function
23	DATA-B	B signal data input terminal.
24	OUTPUT-B	B signal output terminal.
25	OUTPUT-R	R signal output terminal.
26	CLAMP-R	Clamp (R) terminal.
27	DATA-R	R signal data input terminal.
28	NOISE CANCELLER	Sync. separation clamp terminal.
29	12V	Apply +12V.
30	SYNC. SEP. FILTER	Sync. separation filter terminal.
31	V. OUT	Vertical sync. signal output terminal.
32	V. FB	Vertical sync. feedback terminal.
33	V. HEIGHT	Vertical sync. oscillation terminal.
34	V. OSC	Vertical Hold control terminal.
35	V. SYNC	Vertical sync. integration terminal.
36	———	Not used.
37	50/60 Hz	50/60 Hz select and feedback pulse input terminal.
38	H. AFC	Horizontal sync. AFC terminal.
39	H. OSC	Horizontal Hold control terminal.
40	H. CENTER	Horizontal center control terminal.
41	H. OUT	Horizontal sync. signal output terminal.
42	8.5V	Apply +8.5V.

SCHEMATIC DIAGRAM FOR MODEL CT-1331Y (CHASSIS G14M-3)

IMPORTANT SAFETY NOTICE

THE SHADED AREA ON THIS SCHEMATIC DIAGRAM INCORPORATES SPECIAL FEATURES IMPORTANT FOR PROTECTION FROM X-RADIATION, FIRE AND ELECTRICAL SHOCK HAZARDS. WHEN SERVICING, IT IS ESSENTIAL THAT ONLY MANUFACTURER'S SPECIFIED PARTS BE USED FOR THE CRITICAL COMPONENTS IN THE SHADED AREAS OF THE SCHEMATIC.

NOTE:

1. **S301** : Service switch in NORMAL position.
2. **S801** : Power switch in OFF position.
3. **S5301** : Input Selector (LINE A) switch.
4. **S5302** : Input Selector (LINE B) switch.
5. **S5303** : Input Selector (VTR) switch.
6. **SW5301** : Video Mode Selector switch.
7. RESISTOR
   All resistors are carbon 1/4W resistor, unless marked as follows:
   Unit of resistance is OHM (Ω), (K = 1,000, M = 1,000,000).
   - △ : Solid resistor
   - ● : Metal Oxide
   - ○ : Non flammable
   - ◪ : Wire Wound (non flammable)
   - ⊗ : Fuse
   - Ⓛ : Lead Less Type
   - ◎ : Fixed Metal Film
8. CAPACITOR
   All capacitors are ceramic 50V capacitor, unless marked as follows:
   Unit of capacitance is μF, unless otherwise noted.
   - +‖− : Electrolytic
   - (NP) : Bipolar
   - Ⓩ : Z Type
   - Ⓛ : Lead Less Type
   - Ⓜ : Polyester
   - ⊠ : Polypropylene
   - ● : Temperature Conpensation
   - Ⓣ : Dipped Tantalum
9. COIL
   Unit of inductance is μH
10. TEST POINT
    : Test point position.
11. VOLTAGE MEASUREMENT
    Voltage is measured by an electronic voltmeter receiving rainbow color bar signal when all customer's controls are set to fully clockwise position.
12. This schematic diagram is the latest at the time of printing and subject to change without notice.
13. Positive and negative voltage lines.
    Video signal
    Audio signal
    V or H Out
    S-Video Signal

Note:
The Power Circuit board contains a circuit area which uses a separate power supply to isolate the ground connection. The circuit is defined by HOT and COLD indications in the schematic diagram. Take the following precautions.

PRECAUTIONS

1. Do not touch the hot part or the hot and cold parts at the same time or you may receive a shock.
2. Do not short-circuit the hot and cold circuits or a fuse may blow and parts may break.
3. Do not connect an instrument, such as an oscilloscope, to the hot and cold circuits simultaneously or a fuse may blow.
   Connect the ground of instruments to the ground connection of the circuit being measured.
4. Make sure to disconnect the power plug before removing the chassis.

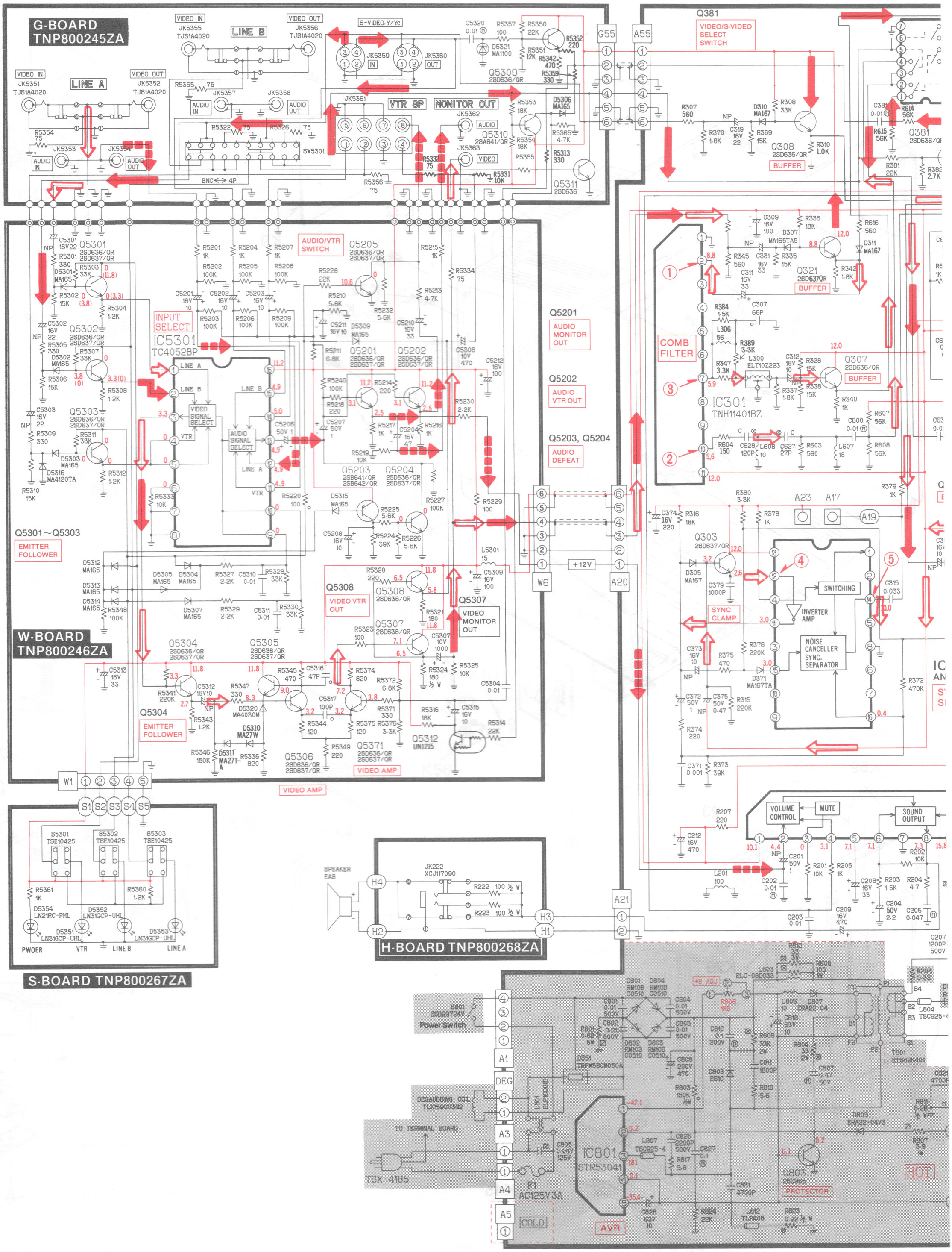
G-BOARD
TNP800245ZA
VIDEO IN
JK5355
TJS1A4020
LINE B
VIDEO OUT
JK5356
TJS1A4020
S-VIDEO-Y/Yc
JK5359
IN
JK5360
OUT
VIDEO IN
JK5351
TJS1A4020
LINE A
VIDEO OUT
JK5352
TJS1A4020
JK5357
JK5358
AUDIO IN
AUDIO OUT
JK5353
JK5354
SW5301
JK5361
VTR 8P
MONITOR OUT
JK5362
JK5363
AUDIO
VIDEO
BNC<-> 4P
Q5309
2SD636/QR
Q5310
2SA641/QR
Q5311
2SD636
D5306
MA165
G55
A55
Q381
VIDEO/S-VIDEO
SELECT
SWITCH
Q308
2SD636/QR
BUFFER
Q381
2SD636/QR
Q321
2SD637QR
BUFFER
Q307
2SD636/QR
BUFFER
COMB
FILTER
IC301
TNH11401BZ
AUDIO/VTR
SWITCH
Q5205
2SD636/QR
2SD637/QR
INPUT
SELECT
IC5301
TC4052BP
LINE A
LINE B
VIDEO
SIGNAL
SELECT
VTR
AUDIO
SIGNAL
SELECT
Q5201
AUDIO
MONITOR
OUT
Q5202
AUDIO
VTR OUT
Q5203, Q5204
AUDIO
DEFEAT
Q5203
2SB641/QR
2SB642/QR
Q5204
2SD636/QR
2SD637/QR
Q5301~Q5303
EMITTER
FOLLOWER
Q5301
2SD636/QR
2SD637/QR
Q5302
2SD636/QR
2SD637/QR
Q5303
2SD636/QR
2SD637/QR
Q5304
2SD636/QR
2SD637/QR
Q5305
2SD636/QR
2SD637/QR
Q5306
2SD636/QR
2SD637/QR
Q5308
VIDEO VTR
OUT
Q5307
VIDEO
MONITOR
OUT
Q5371
2SD636/QR
2SD637/QR
VIDEO AMP
Q5312
UN1215
+12V
W6
A20
W-BOARD
TNP800246ZA
W1
S1 S2 S3 S4 S5
S5301
TSE10425
S5302
TSE10425
S5303
TSE10425
D5354
LN21RC-PHL
D5352
LN31GCP-UHL
D5351
LN31GCP-UHL
D5353
LN31GCP-UHL
PWOER
VTR
LINE B
LINE A
S-BOARD TNP800267ZA
SPEAKER
EAS
JK222
XCJ117090
H4
H3
H2
H1
H-BOARD TNP800268ZA
A21
A23
A17
A19
SYNC
CLAMP
SWITCHING
INVERTER
AMP
NOISE
CANCELLER
SYNC.
SEPARATOR
VOLUME
CONTROL
MUTE
SOUND
OUTPUT
Power Switch
S801
ESB99724V
DEGAUSSING COIL
TLK159003N2
TO TERMINAL BOARD
TSX-4185
F1
AC125V3A
A1
DEG
A3
A4
A5
COLD
IC801
STR53041
AVR
Q803
2SD965
PROTECTOR
HOT
+B ADJ
D851
TRPW5B0M050A
D805
ERA22-04V3
TB01
ET542K401

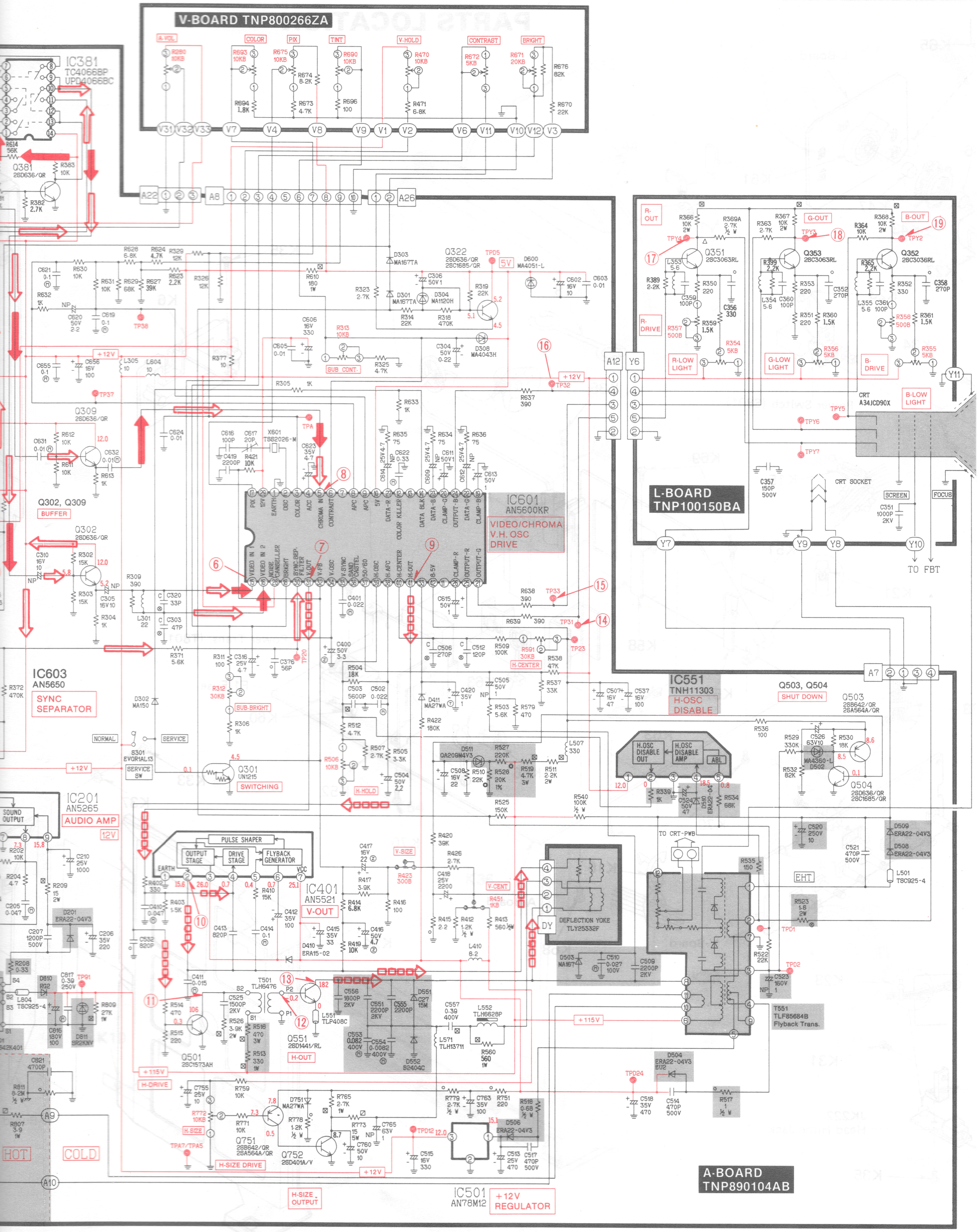
V-BOARD TNP800266ZA
A-VOL
COLOR
PIX
TINT
V-HOLD
CONTRAST
BRIGHT
R693 10KB
R675 10KB
R674 8.2K
R673 4.7K
R694 1.8K
R690 10KB
R696 100
R470 10KB
R471 6.8K
R672 5KB
R671 20KB
R676 82K
R670 22K
V31 V32 V33 V7 V4 V8 V9 V1 V2 V6 V11 V10 V12 V3
A22 A8 A26
IC381
TC4066BP
UPD4066BC
R614 56K
Q381 2SD636/QR
R383 10K
R382 2.7K
R628 6.8K
R624 4.7K
R329 12K
R630 10K
R631 10K
R629 68K
R627 39K
R623 2.2K
R326 12K
C621 0.1
R632 1K
NP
C620 50V 2.2
C619 0.1
TP38
R610 180 1W
D303 MA167TA
Q322 2SD636/QR 2SC1685/QR
TPD5
5V
D600 MA4051-L
C602 16V 10
C603 0.01
C306 50V 1
R323 2.7K
D301 MA167TA
D304 MA1120H
R319 22K
R314 22K
R318 470K
5.2
5.1
4.5
C606 16V 330
R313 10KB
C605 0.01
SUB CONT.
R325 4.7K
C304 50V 0.22
D308 MA4043H
16
+12V
TP32
R637 390
A12
Y6
+12V
C655 0.1
C656 16V 100
L305 10
L604 10
R377 10
TP37
R305 1K
R633 1K
Q309 2SD636/QR
12.0
C631 0.01
R612 10K
C632 0.01
R611 10K
R613 1K
TPA
C624 0.01
C616 100P
C617 20P
X601 TS82026-M
C419 2200P
R421 10K
C623 35V 4.7
8
R635 75
R634 75
R636 75
C614 25V 4.7
C622 0.33
C609 25V 4.7
C611 50V 1
C612 25V 4.7
C613 50V 1
Q302, Q309
BUFFER
Q302 2SD636/QR
C310 16V 10
R302 15K
12.0
5.8
5.2
NP
R303 15K
C305 16V 10
R304 1K
R309 390
L301 22
C320 33P
C303 47P
TP20
R371 5.6K
IC601
AN5600KR
VIDEO/CHROMA
V.H. OSC
DRIVE
PIX 12V EARTH OSC COLOR ACC CHROMA IN CONTRAST APC APC 5V DATA-R COLOR KILLER DATA BLK DATA-B CLAMP-G OUTPUT-B DATA-G CLAMP-B
VIDEO IN 1 VIDEO IN 2 NOISE CANCELLER BRIGHT SYNC.SEP. FILTER V.OUT V.FB V.OSC V.SYNC SAND CASTEL 50/60 H.OSC H.AFC H.CENTER H.OUT B.5V CLAMP-R OUTPUT-R OUTPUT-G
6
7
9
C401 0.022
C615 50V 1
R638 390
TP33
15
R639 390
TP31
14
C506 270P
C512 120P
R509 100K
R591 30KB
H-CENTER
R538 47K
TP23
IC603
AN5650
SYNC SEPARATOR
R372 470K
D302 MA150
R311 100
C316 25V 4.7
C376 56P
R312 30KB
SUB-BRIGHT
R306 1K
R504 18K
C503 5600P
C502 0.022
R512 4.7K
R507 2.7K
R505 3.3K
R506 10KB
H-HOLD
C504 50V 2.2
C420 35V 1
D411 MA27WA
R422 180K
C505 50V 1
R503 5.6K
R579 470
R537 33K
C507 16V 47
C537 16V 100
IC551
TNH11303
H-OSC DISABLE
Q503, Q504
SHUT DOWN
Q503 2SB642/QR 2SA564A/QR
R536 100
R529 330K
C526 63V 10
R530 18K
8.6
8.5
MA4360-L D502
R532 82K
0.1
Q504 2SD636/QR 2SC1685/QR
NORMAL
SERVICE
S301 EVQR1AL13
SERVICE SW
+12V
0.1
Q301 UN1215
4.5
SWITCHING
D511 0A209M4V3
R527 220K
C508 16V 22
R510 22K
R526 20K 1%
R519 4.7K 3W
L507 330
R511 2.2K 2W
R525 150K
R540 100K ½ W
H.OSC DISABLE OUT
H.OSC DISABLE AMP
ABL
12.0
0
18.5
0.8
R539 1K
C524 50V 47
D510 ERA22-04V3
R534 68K
IC201
AN5265
AUDIO AMP
12V
SOUND OUTPUT
7.3
15.8
R202 10K
C210 25V 1000
R204 4.7
R209 15 2W
C205 0.047
D201 ERA22-04V3
C207 1200P 500V
C206 35V 220
R208 0.33
S4
S2
S3
L804 TSC925-4
D810 RG2
C817 0.39 250V
TP91
C816 180V 100
D811 S2K0NV
C821 4700P
R811 8.2M ½ W
R807 3.9 1W
A9
A10
HOT
COLD
PULSE SHAPER
OUTPUT STAGE
DRIVE STAGE
FLYBACK GENERATOR
EARTH VCC
R402 330
15.6
26.0
0.7
0.4
0.7
25.1
R410 15K
C412 35V 100
C414 0.1
C413 820P
C410 0.047
R403 1.5K
C532 820P
IC401
AN5521
V-OUT
C417 16V 22
V-SIZE
R423 300B
R417 3.9K
R414 6.8K
R416 100
C415 35V 33
C416 50V 4.7
D410 ERA15-02
R419 10K
R420 39K
R426 2.7K
C418 25V 2200
V-CENT
R451 1KB
R415 2.2
R412 1.2K ½ W
R413 560 ½W
L410 8.2
DY
DEFLECTION YOKE TLY25332F
10
11
C411 0.015
T501 TLH6476
13
182
P2
-0.2
P1
12
0
L551 TLP408C
S2
S1
R514 470
106
0.3
R515 220
Q501 2SC1573AH
C525 1500P 2KV
R526 3.9K 2W
R518 470 3W
R513 330 1W
Q551 2SD1441/RL
H-OUT
C556 1800P 2KV
C551 2200P 2KV
C555 2200P
D551 C27 15M
C553 0.082 400V
C554 0.0082 400V
D552 B2404C
C557 0.39 400V
L552 TLH6628P
L571 TLH13711
R560 560 1W
+115V
H-DRIVE
C755 25V 10
R759 10K
R772 10KB
H-SIZE
R771 10K
7.8
7.3
0.5
D751 MA27WA
R778 1.2K ½ W
Q751 2SB642/QR 2SA564A/QR
Q752 2SD401A/V
8.7
R765 2.7K 1W
R773 15 5W
NP
C765 63V 1
C760 50V 10
TPA7/TPA5
H-SIZE DRIVE
TPD12
12.0
C515 16V 330
+12V
H-SIZE OUTPUT
IC501
AN78M12
+12V REGULATOR
R779 2.7K ½ W
C763 35V 100
R751 220
R518 0.68 ½ W
D506 ERA22-04V3
15.1
C513 25V 470
C517 470P 500V
TO CRT-PWB
C520 250V 10
C521 470P 500V
D509 ERA22-04V3
D508 ERA22-04V3
L501 TSC925-4
EHT
R535 150
R523 1.8 2W
TPD1
R522 22K
TPD2
C523 160V 1
NP
T551 TLF85684B Flyback Trans.
D503 MA157
C510 0.027 100V
C509 2200P 2KV
TPD24
D504 ERA22-04V3 E02
C518 35V 470
C514 470P 500V
R517 ½ W
A7
L-BOARD TNP100150BA
R366 10K 2W
R369A 2.7K ½ W
R367 10K 2W
R363 2.7K
R368 10K 2W
R364 10K
B-OUT
19
G-OUT
18
R-OUT
17
TPY4
TPY3
TPY2
Q351 2SC3063RL
Q353 2SC3063RL
Q352 2SC3036RL
L353 5.6
R389 2.2K
R350 220
C359 100P
C356 330
R359 1.5K
R357 500B
R354 5KB
R399 2.2K
L354 5.6
C360 100P
R353 220
C352 270P
R351 220
R360 1.5K
R356 5KB
R365 2.2K
L355 5.6
C361 100P
R352 330
C358 270P
R358 500B
R361 1.5K
R355 5KB
R-DRIVE
R-LOW LIGHT
G-LOW LIGHT
B-DRIVE
B-LOW LIGHT
Y11
CRT A34JCD90X
TPY5
TPY6
TPY7
C357 150P 500V
CRT SOCKET
SCREEN
FOCUS
C351 1000P 2KV
Y7 Y9 Y8 Y10
TO FBT
A-BOARD TNP890104AB
7 8 9 10 11 12 1

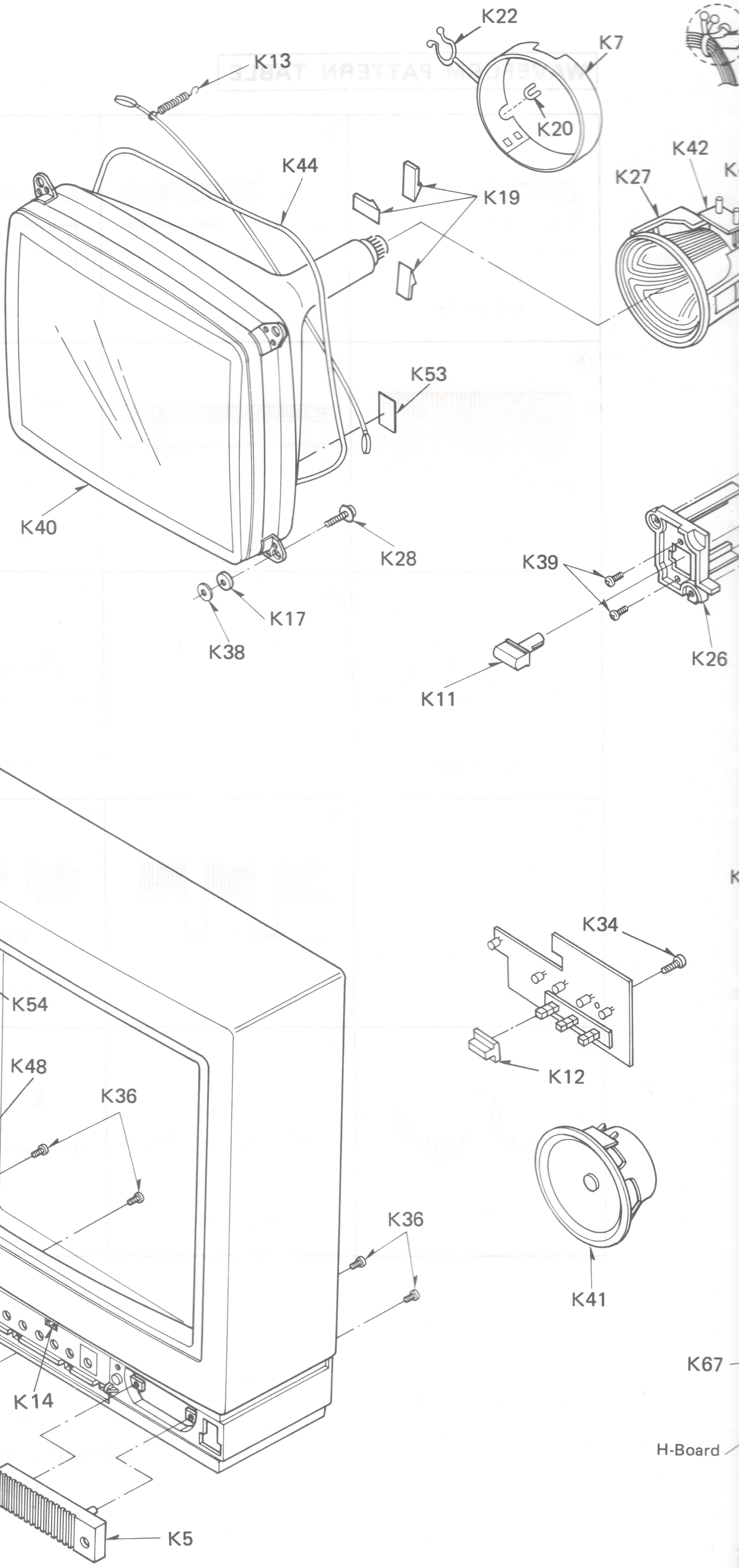
K22
K7
K13
K20
K42
K27
K44
K19
K53
K40
K28
K39
K17
K38
K26
K11
K1
K54
K48
K36
K34
K12
K36
K41
K67
K10
K4
K14
H-Board
K3
K5

PARTS LOCATION

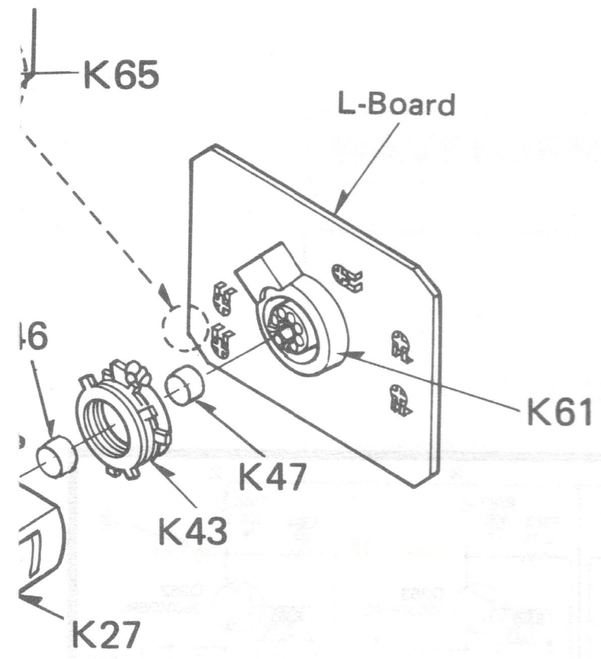

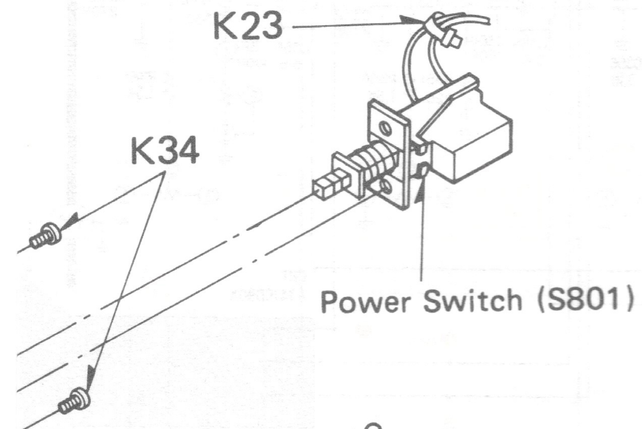

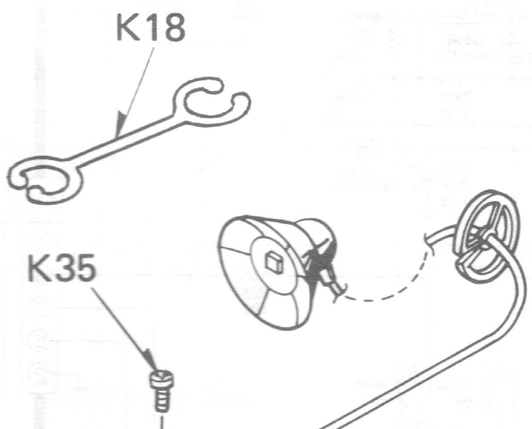

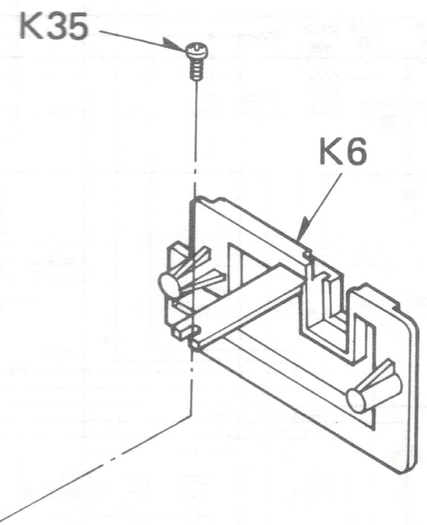

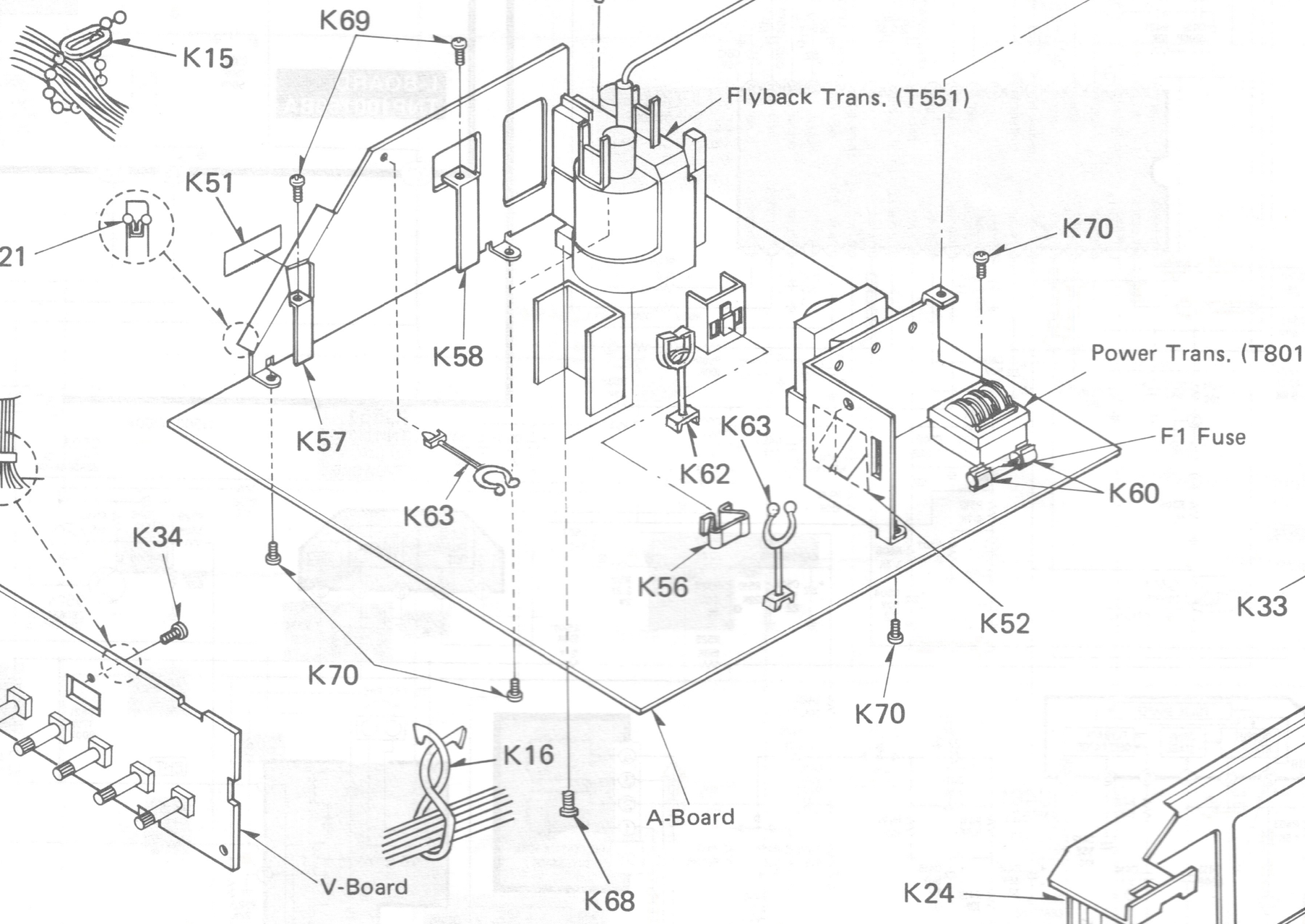

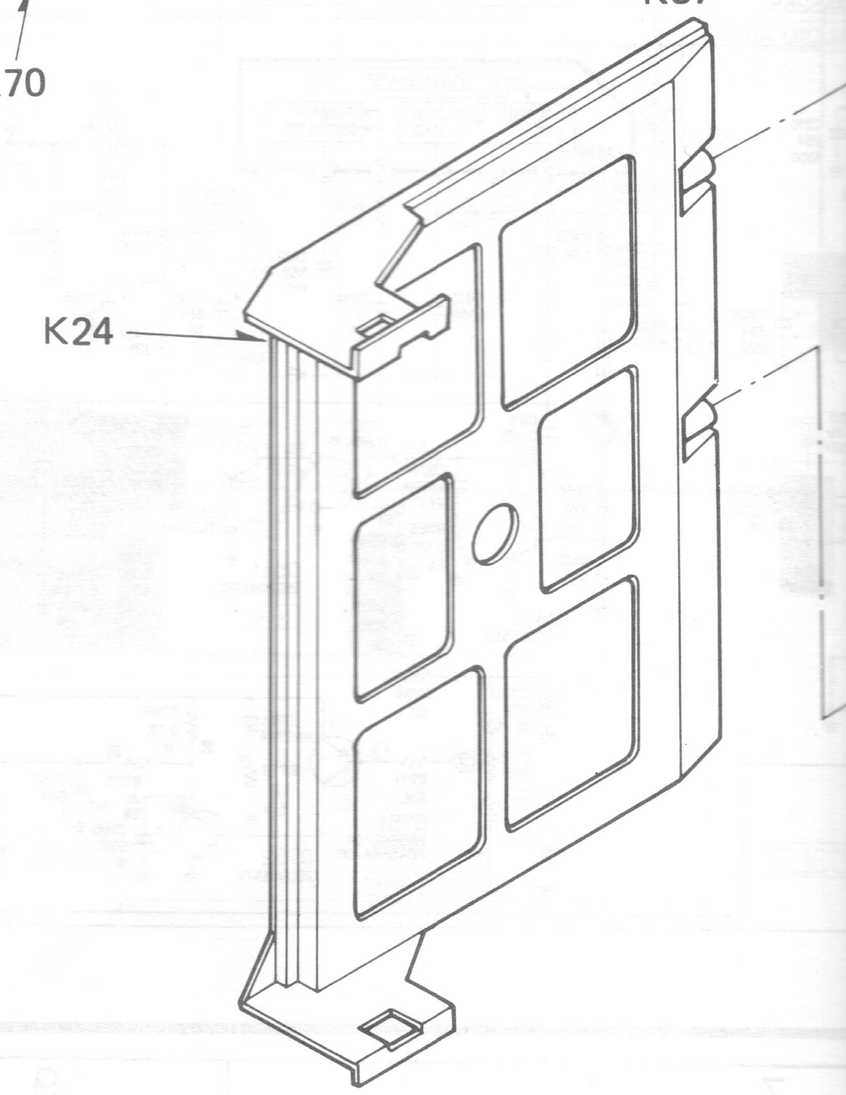

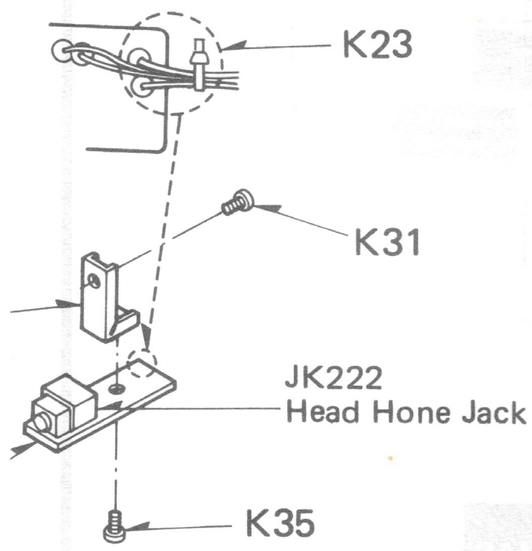

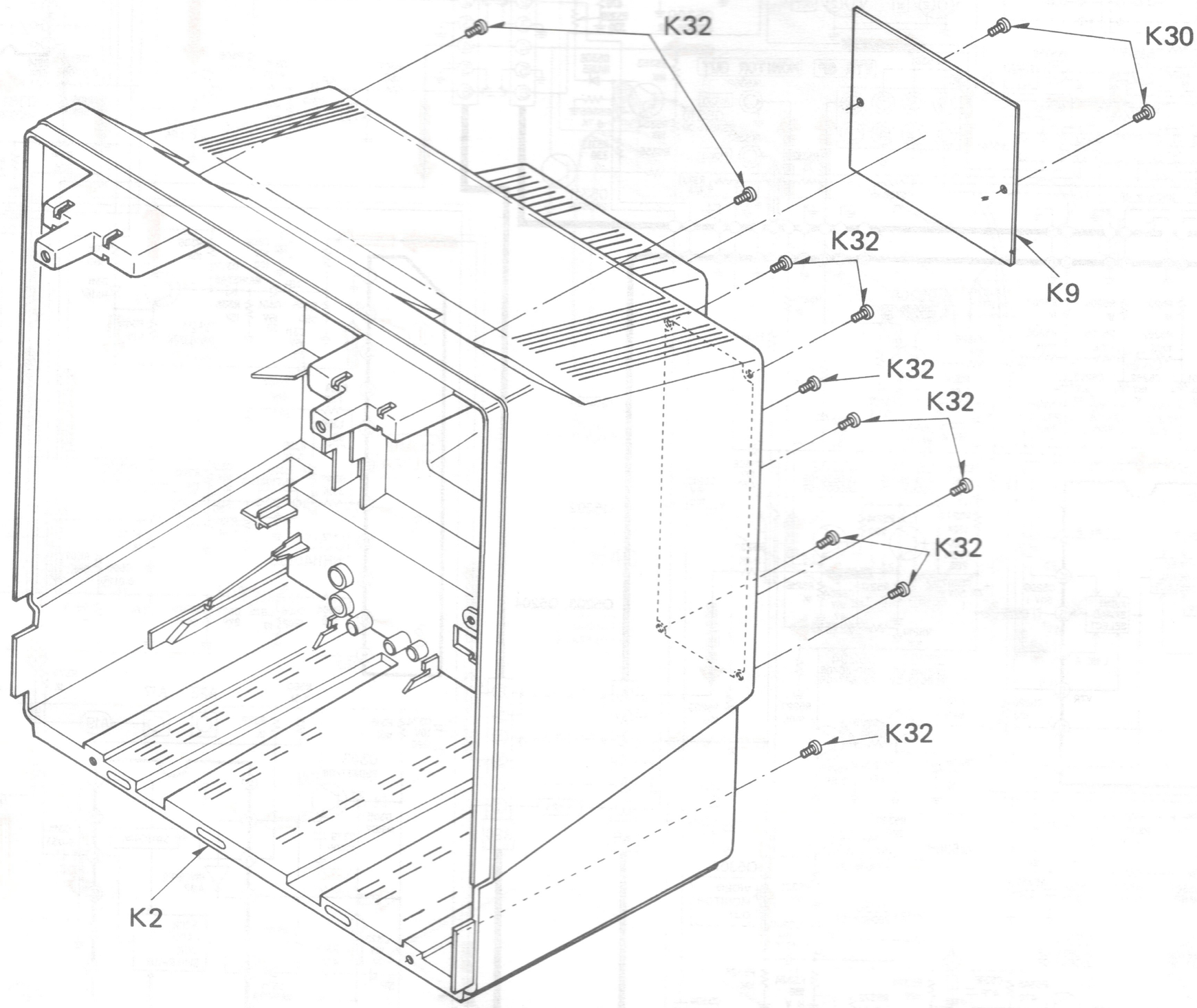
K32
K30
K32
K9
K32
K32
K32
K32
K2

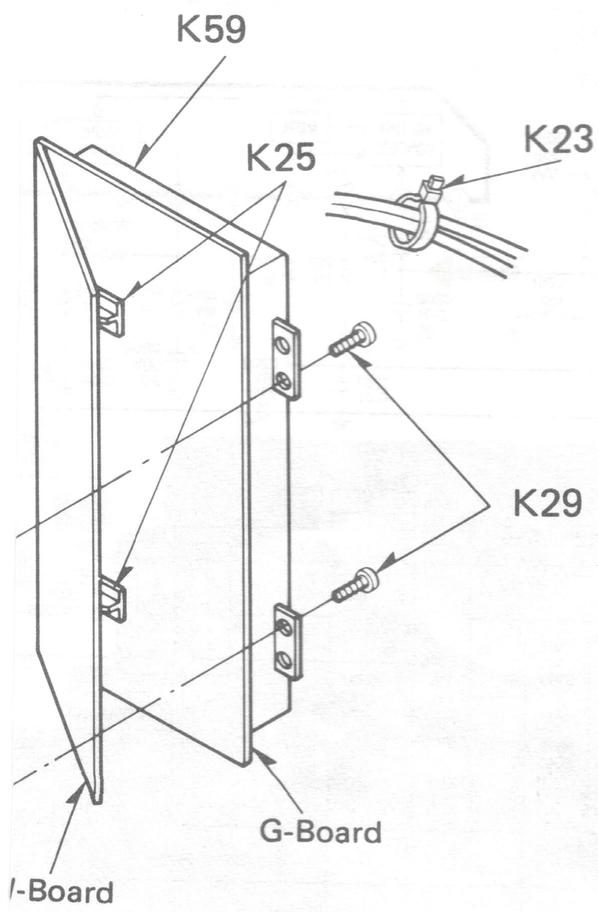
K59
K25
K23
K29
G-Board
/-Board

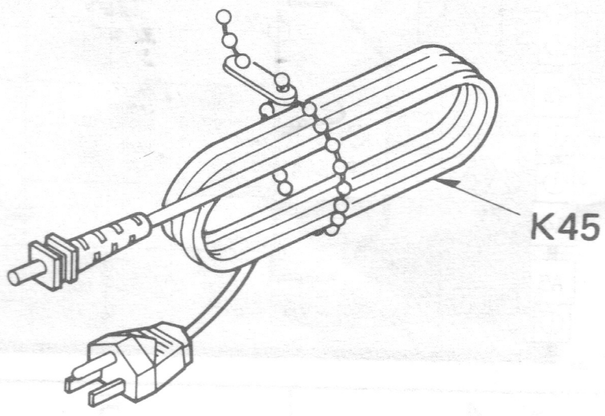
K45

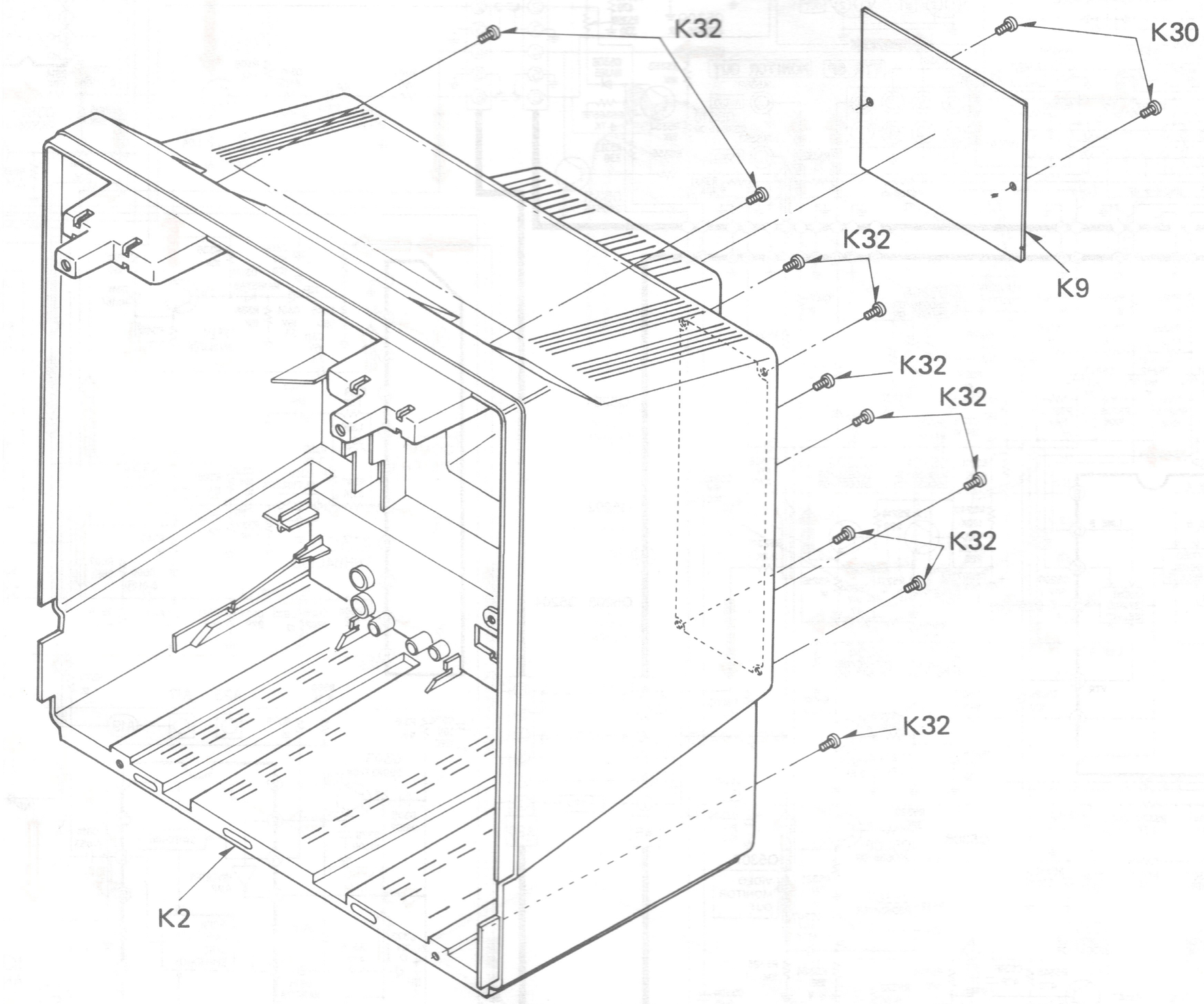
K32
K30
K32
K9
K32
K32
K32
K32
K2

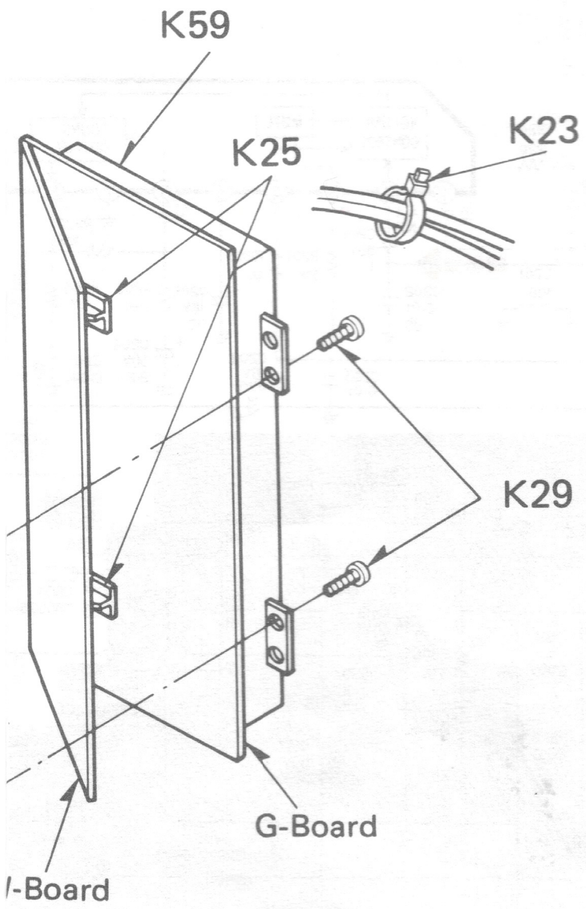
K59
K25
K23
K29
G-Board
I-Board

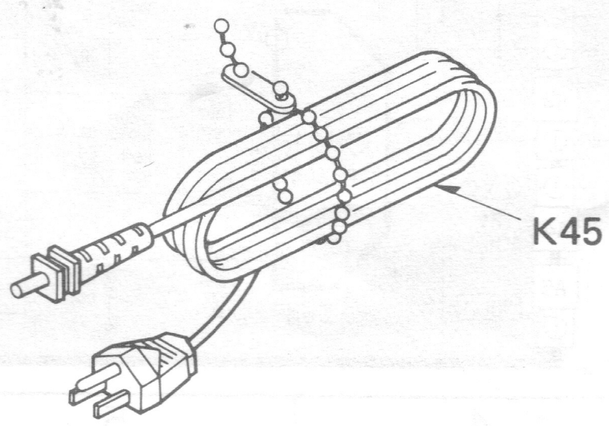
K45

REPLACEMENT PARTS LIST

Important Safety Notice

Components identified by the International symbol ⚠ have special characteristics important for safety.
When replacing any of these components use only manufacture's specified Parts.

Abbreviation of Part Name and Description

1. Resistor

Example:

ERD25TJ104 C 100KOHM, J, 1/4W

TYPE ALLOWANCE

TYPE	ALLOWANCE
C : Carbon F : Fuse M : Metal Oxide Metal Film S : Solid W : Wire Wound	F : ±1% G : ±2% J : ±5% K : ±10% M : ±20%

2. Capacitor

Example:

ECKF1H103ZF C 0.01PF, Z, 50V

TYPE ALLOWANCE

TYPE	ALLOWANCE
C : Ceramic E : Electrolytic P : Polyester PP : Polypropylene S : Styrol T : Tantalum	C : ±0.25 pF D : ±0.5 pF F : ±1 pF J : ±5% K : ±10% L : ±15% M : ±20% P : ±100%,–0% Z : ±80%,–20%

CABINET & MAIN PARTS

Ref.No.	Part No.	Description
K1	TKY132113-1	CABINET ASSY
K2	TKU289602-2H	REAR COVER W/MODEL
K3	TKP1312295	BOTTOM DOOR
K4	TKP1312308-1	PANEL
K5	TKP1312393	PANEL(SPEAKER)
K6	TKK879501-1	BRACKET
K7	TUC24557	DY SHIELD CASE
K8	TBM870018	DOOR EXPPESSION SHEET
K9	TBM870030	MODEL PLATE
K10	TBM879004	POWER EXPRESSION SHEET
K11	TBX1388800	KNOB(POWER)
K12	TBX1389002	KNOB
K13	TES1208	COIL SPRING
K14	TEK17918	SWITCH
K15	TMM1455	BEADS BAND
K16	TMM15414	CLAMPER
K17	TMM15501-1	RUBBER CUSHION
K18	TMM16422	W.CLAMPER
K19	TMM17514	DY WEDGE
K20	TMM6434	BUSHING
K21	TMM7464	LEAD CLAMPER
K22	TMM76403-1	CLAMPER
K23	TMM81416	CORD BAND (SMALL)
K24	TMX13425	BRACKET
K25	TMX6424	L.CLAMPER
K26	TMW13311-2	POWER BRACKET
K27	TMX13936	DY SHIELD BRACKET
K28	THE492-4	SCREW
K29	XTB4+10A	SCREW
K30	XTB4+10AFZ	SCREW
K31	XTB4+12A	SCREW
K32	XTB4+15AFZ	SCREW
K33	XTB4+8J	SCREW
K34	XTV3+12A	SCREW
K35	XTW3+8T	SCREW
K36	XTW4+Z12D	SCREW
K37	XWC4B	WASHER
K38	XWG5E20	WASHER
K39	XYN3+C8	SCREW
⚠ K40	A34JCD90X	PICTURE TUBE
	TNP100150BA	PC BOARD W/COMPONENT(CRT)
	TNP800245ZA	PC BOARD W/COMPONENT(G)
	TNP800246ZA	PC BOARD W/COMPONENT(W)
	TNP800266ZA	PC BOARD W/COMPONENT(VR)
	TNP800267ZA	PC BOARD W/COMPONENT(LED)
	TNP800268ZB	PC BOARD W/COMPONENT(H)
	TNP890104AB	PC BOARD W/COMPONENT(A)
K41	EAS8P47SE	SPEAKER
⚠ K42	TLY85355F	DEFLECTION YOKE
K43	TLC2042-1	CONVERGENCE COIL
⚠ K44	TLK159003N2	DEGAUSS COIL
⚠ K45	TSX4185	POWER CORD
	TXAJTT4P530	4P CONNECTOR ASSY(A1)
	TXFJT01DAZ	1P EARTH READ (CRT)
	TXFJT01NHZ	1P CONNECTOR ASSY
⚠ S801	ESB99724V	POWER SWITCH
⚠ F1	XBA1F30NU100	FUSE 125V 3A
K46	T4F72425Q	COTTON TAPE 55M
K47	T4F90219-1	MAIRA TAPE 20M
	TPC8910304	OUTER CARTON
	TPD131078-1	FILLER(UPPER)
	TPD132078	FILLER(BOTTOM)
	TPD139230	FILLER(FRONT)
	TPE24137	SET COVER(UPPER)
	TPE24141	SET COVER
	XZBT6532	BAG
	TQB537061	SAFETY INSTRUCTION SHEET
	TQB810897	INSTRUCTION BOOK
	TQD6715023	SERVICE CENTER LIST
	TQD6718063	WARRANTY CARD

	Ref.No.	Part No.	Description
⚠	K48	TQF14278	WARNING LABEL
⚠	K49	TQF14279	TOTAL WARNING LABEL
⚠	K50	TQF37891	X.LABEL
⚠	K51	TQF80720	NHW LABEL
	K52	TQF85762	FUSE LABEL
	K53	TQF87103	CRT DRIVE LABEL
⚠	K54	TQF87258	CRT PARTS NO LABEL

I.C

	IC201	AN5265	INTEGRATED CIRCUIT
	IC301	TNH11401BZ	CIRUIT BOARD (HIC)
	IC381	TC4066BP	INTEGRATED CIRCUIT
	IC401	AN5521	INTEGRATED CIRCUIT
	IC501	AN78M12	INTEGRATED CIRCUIT
⚠	IC551	TNH11303	CIRCUIT BOARD (HIC)
⚠	IC601	AN5600KR	INTEGRATED CIRCUIT
	IC603	AN5650	INTEGRATED CIRCUIT
⚠	IC801	STR53041	INTEGRATED CIRCUIT
	IC5301	TC4052BP	INTEGRATED CIRCUIT

TRANSISTORS

	Q301	UN1215	TRANSISTOR
	Q302	2SD636R	TRANSISTOR
	Q303	2SD637R	TRANSISTOR
	Q307	2SD636R	TRANSISTOR
	Q308	2SD636R	TRANSISTOR
	Q321	2SD637R	TRANSISTOR
	Q322	2SD636R	TRANSISTOR
	Q351	2SC3063	TRANSISTOR
	Q352	2SC3063	TRANSISTOR
	Q353	2SC3063	TRANSISTOR
	Q381	2SD636R	TRANSISTOR
	Q501	2SC1573AH	TRANSISTOR
	Q503	2SB642Q	TRANSISTOR
	Q504	2SD636R	TRANSISTOR
	Q551	2SD1441	TRANSISTOR
	Q605	2SD636R	TRANSISTOR
	Q751	2SB642Q	TRANSISTOR
	Q752	2SD401A	TRANSISTOR
⚠	Q803	2SD965	TRANSISTOR
	Q5201	2SD636R	TRANSISTOR
	Q5202	2SD636R	TRANSISTOR
	Q5203	2SB641R	TRANSISTOR
	Q5204	2SD636R	TRANSISTOR
	Q5205	2SD636R	TRANSISTOR
	Q5301	2SD636R	TRANSISTOR
	Q5302	2SD636R	TRANSISTOR
	Q5303	2SD636R	TRANSISTOR
	Q5304	2SD636R	TRANSISTOR
	Q5305	2SD636R	TRANSISTOR
	Q5306	2SD636R	TRANSISTOR
	Q5307	2SD638R	TRANSISTOR
	Q5308	2SD638R	TRANSISTOR
	Q5309	2SD636R	TRANSISTOR
	Q5310	2SB641R	TRANSISTOR
	Q5311	2SD636R	TRANSISTOR
	Q5312	UN1215	TRANSISTOR
	Q5371	2SD636R	TRANSISTOR

DIODES

⚠	D201	ERA22-04	DIODE.SI
	D301	MA167	DIODE
	D302	MA150	DIODE
	D303	MA167	DIODE
	D304	MA1120H	DIODE
	D305	MA167	DIODE
	D307	MA165	DIODE
	D308	MA4043H	DIODE.SI
	D310	MA167	DIODE
	D311	MA167	DIODE
	D371	MA167	DIODE
	D410	ERA15-02	DIODE.SI
	D411	MA27WA	DIODE
⚠	D502	MA4360L	DIODE.SI
⚠	D503	MA167	DIODE
⚠	D504	ERA22-04	DIODE.SI
⚠	D506	ERA22-04	DIODE.SI
⚠	D508	ERA22-04	DIODE.SI
⚠	D509	ERA22-04	DIODE.SI
⚠	D510	ERA22-04	DIODE.SI
⚠	D511	TVSQA209M4	DIODE.SI
⚠	D551	TVSC2715M	DIODE
⚠	D552	TVSB2404C	DIODE.SI
	D600	MA4051L	DIODE
	D751	MA27WA	DIODE
⚠	D801	TVSRM10B	DIODE
⚠	D802	TVSRM10B	DIODE
⚠	D803	TVSRM10B	DIODE
⚠	D804	TVSRM10B	DIODE
⚠	D805	ERA22-04	DIODE.SI
⚠	D807	ERA22-04	DIODE.SI
⚠	D808	TVSES1	DIODE
⚠	D810	TVSRG2	DIODE.SI
⚠	D811	TVSSR2KN	DIODE.SI
⚠	D851	TRPW5B0M050A	THERMISTOR
	D5301	MA165	DIODE
	D5302	MA165	DIODE
	D5303	MA165	DIODE
	D5304	MA165	DIODE
	D5305	MA165	DIODE
	D5306	MA167	DIODE
	D5307	MA165	DIODE
	D5309	MA165	DIODE
	D5310	MA27W	DIODE
	D5311	MA27T-A	DIODE.SI
	D5312	MA165	DIODE
	D5313	MA165	DIODE
	D5314	MA165	DIODE
	D5315	MA165	DIODE
	D5316	MA4120	DIODE.SI
	D5320	MA4030M	DIODE.SI
	D5321	MA4120M	DIODE.SI
	D5351	LN31GCPUH	DIODE(LED)
	D5352	LN31GCPUH	DIODE(LED)
	D5353	LN31GCPUH	DIODE(LED)
	D5354	LN21RCPH	DIODE

COIL & TRANSFORMERS

L201	TLT101K991K	PEAKING COIL
L300	ELT10Z223	COIL
L301	TLX220J176C	PEAKING COIL
L305	TLQ100K126	PEAKING COIL
L306	TLT560K991K	PEAKING COIL

	Ref.No.	Part No.	Description
	L353	TLQ056K126	PEAKING COIL
	L354	TLQ056K126	PEAKING COIL
	L355	TLQ056K126	PEAKING COIL
	L410	TLQ082K126	PEAKING COIL
	L501	TSC925-4	FERRITE CORE
	L551	TLP408	CHOKE COIL
	L552	TLH6628P	COIL
	L571	TLH13711	CHOKE COIL
	L604	TLQ100K126	PEAKING COIL
	L607	TLT180K991K	PEAKING COIL
	L608	TLT100K991K	PEAKING COIL
⚠	L801	ELF18D616	LINE FILTER
⚠	L803	ELC08D033	CHOKE COIL
	L804	TSC925-4	FERRITE CORE
⚠	L806	TLT100K991K	PEAKING COIL
	L807	TSC925-4	FERRITE CORE
	L5301	TLQ150K126	PEAKING COIL
	T501	TLH6476	COIL
⚠	T551	TLF85691B	FLYBACK TRANS
⚠	T801	ETS42K401A	POWER TRANS

CAPACITORS

	Ref.No.	Part No.				
	C201	ECEA1HN010S	E	1UF		50V
	C202	ECQM1H103JZ	P	0.01UF	J	50V
	C203	ECKF1H103ZF	C	0.01UF	Z	50V
	C204	ECEA1HU2R2	E	2.2UF		50V
	C205	ECQM1H473JZ	P	0.047UF	J	50V
	C206	ECEA1VU221	E	220UF		35V
	C207	ECKD2H222KB2	C	2200PF	K	500V
	C208	ECEA1CU330	E	33UF		16V
	C209	ECEA1CG471S	E	470UF		16V
	C210	ECEA1EU102	E	1000UF		25V
	C212	ECEA1CU471	E	470UF		16V
	C303	ECCF1H470JC	C	47PF	J	50V
	C304	ECEA1HUR22	E	0.22UF		50V
	C305	ECEA1CN100S	E	10UF		16V
	C306	ECEA1HU010	E	1UF		50V
	C307	ECCF1H680JC	C	68PF	J	50V
	C309	ECEA1CU101	E	100UF		16V
	C311	ECEA1CN330S	E	33UF		16V
	C312	ECEA1CN220S	E	22UF		16V
	C315	ECQM1H332JZ	P	3300PF	J	50V
	C316	ECEA1EU4R7	E	4.7UF		25V
	C319	ECEA1CN220S	E	22UF		16V
	C320	ECCF1H330JC	C	33PF	J	50V
	C331	ECEA1CN330S	E	33UF		16V
	C351	ECKC3D102JBN	C	1000PF	J	2KV
	C352	ECKD2H151KB	C	150PF	K	500V
	C356	ECCF1H331J	C	330PF	J	50V
	C357	ECKD2H151KB	C	150PF	K	500V
	C358	ECCF1H271J	C	270PF	J	50V
	C359	ECCF1H101J	C	100PF	J	50V
	C360	ECCF1H101J	C	100PF	J	50V
	C361	ECCF1H101J	C	100PF	J	50V
	C371	ECQM1H102JZ	P	1000PF	J	50V
	C372	ECEA1HU010	E	1UF		50V
	C373	ECEA1CN100S	E	10UF		16V
	C374	ECEA1CU221	E	220UF		16V
	C375	ECEA1HNR47S	E	0.47UF		50V
	C376	ECCF1H560JC	C	56PF	J	50V
	C379	ECKF1H102KB	C	1000PF	K	50V
	C381	ECQM1H103JZ	P	0.01UF	J	50V
	C382	ECEA1CN220S	E	22UF		16V
	C400	ECEA50Z3R3	E	3.3UF		50V
	C401	ECQM1H223JZ	P	0.022UF	J	50V
	C410	ECQM1H473JZ	P	0.047UF	J	50V
	C411	ECQM1H153JZ	P	0.015UF	J	50V
	C412	ECEA1VU101	E	100UF		35V
	C413	ECKF1H821KB	C	820PF	K	50V
	C414	ECQM1H104JZ	P	0.1UF	J	50V
	C415	ECEA1VU330	E	33UF		35V
	C416	**ECEA1HFS4R7**	E	**4.7UF**		50V
	C417	**ECEA16Z220**	E	**22UF**		16V
	C418	ECEA1EU222	E	2200UF		25V
	C419	ECKF1H222KB	C	2200PF	K	50V
	C420	ECSZ35EF1N	T	1UF		35V
	C502	ECQM1H223JZ	P	0.022UF	J	50V
	C503	ECQP1562JZ	PP	5600PF	J	100V
	C504	**ECEA1HU2R2**	E	**2.2UF**		50V
	C505	ECEA1HN010S	E	1UF		50V
	C506	ECCF1H271JC	C	270PF	J	50V
	C507	ECEA1CU470	E	47UF		16V
	C508	ECEA1CU220	E	22UF		16V
⚠	C509	ECKC3D222JBN	C	2200PF	J	2KV
⚠	C510	ECQM1273KZ	P	0.027UF	K	100V
	C512	ECCF1H121JC	C	120PF	J	50V
	C513	ECEA1EU471	E	470UF		25V
	C514	ECKD2H471KB2	C	470PF	K	500V
	C515	ECEA1CU331	E	330UF		16V
	C517	ECKD2H471KB2	C	470PF	K	500V
	C518	ECEA1VU471	E	470UF		35V
⚠	C520	ECEA2ES100	E	10UF		250V
	C521	ECKD2H471KB2	C	470PF	K	500V
⚠	C523	ECEA2CGN010	E	1UF		160V
⚠	C524	ECEA1HU470	E	47UF		50V
	C525	ECKC3D152KBN	C	1500PF	K	2KV
	C526	ECEA1JGE100	E	10UF		63V
	C532	ECKF1H821KB	C	820PF	K	50V
⚠	C551	ECKC3D222JBN	C	2200PF	J	2KV
⚠	C553	ECQM4823KZ	P	0.082UF	K	400V
⚠	C554	ECQM4822KZ	P	8200PF	K	400V
⚠	C555	ECKC3D222JBN	C	2200PF	J	2KV
⚠	C556	ECKC3D182JBN	C	1800PF	J	2KV
	C557	ECQF2H394JZ	PP	0.39UF	J	500V
	C600	ECQM1H103JZ	P	0.01UF	J	50V
	C602	ECEA1CU100	E	10UF		16V
	C603	ECKF1H103ZF	C	0.01UF	Z	50V
	C605	ECKF1H103ZF	C	0.01UF	Z	50V
	C606	ECEA1CU331	E	330UF		16V
	C609	ECEA1EN4R7S	E	4.7UF		25V
	C611	ECEA1HU010	E	1UF		50V
	C612	ECEA1EN4R7S	E	4.7UF		25V
	C613	ECEA1HU010	E	1UF		50V
	C614	ECEA1EN4R7S	E	4.7UF		25V
	C615	ECEA1HU010	E	1UF		50V
	C616	ECCF1H101JC	C	100PF	J	50V
	C617	TCRHA020E11	TRIMMER CAPACITOR			
	C619	ECQM1H104JZ	P	0.1UF	J	50V
	C620	ECEA1HN2R2S	E	2.2UF		50V
	C621	ECQM1H104JZ	P	0.1UF	J	50V
	C622	ECQM1H334JZ	P	0.33UF	J	50V
	C623	ECEA1VU4R7	E	4.7UF		35V
	C624	ECQM1H103JZ	P	0.01UF	J	50V

	Ref.No.	Part No.	Description
	C627	ECCF1H270J	C 27PF J 50V
	C628	ECCF1H121JC	C 120PF J 50V
	C631	ECQM1H103JZ	P 0.01UF J 50V
	C632	ECQM1H103JZ	P 0.01UF J 50V
	C655	ECQM1H104JZ	P 0.1UF J 50V
	C656	ECEA1CU101	E 100UF 16V
	C755	ECEA1EU100	E 10UF 25V
	C760	ECEA1HU100	E 10UF 50V
	C763	ECEA1VU101	E 100UF 35V
	C765	ECEA63W1YU	E 0UF 63V
⚠	C801	ECKD2H103PU2	C 0.01UF P 500V
⚠	C802	ECKD2H103PU2	C 0.01UF P 500V
⚠	C803	ECKD2H103PU2	C 0.01UF P 500V
⚠	C804	ECKD2H103PU2	C 0.01UF P 500V
⚠	C805	ECQU1A473KH	PP 0.047UF K 125V
⚠	C807	ECQM1H474JZ	P 0.47UF J 50V
⚠	C808	ECET2DR471SW	E 470UF 200V
⚠	C811	ECKD2H681KB2	C 680PF K 500V
⚠	C812	ECQM2104KZ	P 0.1UF K 200V
	C815	ECKD2H152KB2	C 1500PF K 500V
⚠	C816	ECEA180V100Z	E 10UF 180V
	C817	ECQE2394MS	P 0.39UF M 200V
⚠	C818	ECEA1JU100	E 10UF 63V
⚠	C821	ECKDFL472ZV	C 4700PF Z
⚠	C825	ECKD2H681KB2	C 680PF K 500V
⚠	C826	ECEA1JU100	E 10UF 63V
⚠	C827	ECQM1H104JZ	P 0.1UF J 50V
	C5201	ECEA1CU100	E 10UF 16V
	C5202	ECEA1CU100	E 10UF 16V
	C5203	ECEA1CU100	E 10UF 16V
	C5204	ECEA1CU470	E 47UF 16V
	C5206	ECEA1HU010	E 1UF 50V
	C5207	ECEA1HU010	E 1UF 50V
	C5208	ECEA1CU100	E 10UF 16V
	C5210	ECEA1CU330	E 33UF 16V
	C5211	ECEA1CU100	E 10UF 16V
	C5212	ECEA1CU101	E 100UF 16V
	C5301	ECEA1CN220S	E 22UF 16V
	C5302	ECEA1CN220S	E 22UF 16V
	C5303	ECEA1CN220S	E 22UF 16V
	C5304	ECQM1H103JV	P 0.01UF J 50V
	C5307	ECEA1AU102	E 1000UF 10V
	C5308	ECEA1AU471	E 470UF 10V
	C5309	ECEA1CU101	E 100UF 16V
	C5310	ECKF1H103ZF	C 0.01UF Z 50V
	C5311	ECKF1H103ZF	C 0.01UF Z 50V
	C5312	ECEA1CN100S	E 10UF 16V
	C5313	ECEA1CU330	E 33UF 16V
	C5315	ECEA1CN100S	E 10UF 16V
	C5316	ECCF1H470J	C 47PF J 50V
	C5317	ECCF1H101J	C 100PF J 50V
	C5320	ECQM1H103JZ	P 0.01UF J 50V

RESISTORS

	Ref.No.	Part No.	Description
	R201	ERDS2TJ103	C 10K OHM J 1/4W
	R202	ERDS2TJ103	C 10K OHM J 1/4W
	R203	ERDS2TJ152	C 1.5K OHM J 1/4W
	R204	ERDS2TJ4R7	C 4.7 OHM J 1/4W
	R205	ERDS2TJ102	C 1K OHM J 1/4W
	R207	ERD25FJ221K	C 220 OHM J 1/4W
⚠	R208	ERQ12HKR33	F 0.33 OHM K 1/2W
	R209	ERQ2CJP150S	F 15 OHM J 2W
	R222	ERDS1FJ101	C 100 OHM J 1/2W
	R223	ERDS1FJ101	C 100 OHM J 1/2W
	R280	EVUF2AE25B14	CONTROL B 10K OHM
	R302	ERDS2TJ153	C 15K OHM J 1/4W
	R303	ERDS2TJ153	C 15K OHM J 1/4W
	R304	ERDS2TJ102	C 1K OHM J 1/4W
	R305	ERDS2TJ102	C 1K OHM J 1/4W
	R306	ERDS2TJ102	C 1K OHM J 1/4W
	R307	**ERDS2TJ561**	C **560** OHM J 1/4W
	R308	ERDS2TJ333	C 33K OHM J 1/4W
	R309	ERDS2TJ391	C 390 OHM J 1/4W
	R310	ERDS2TJ102	C 1K OHM J 1/4W
	R311	ERDS2TJ101	C 100 OHM J 1/4W
	R312	EVN88AA00B34	CONTROL B 30K OHM
	R313	EVN65AA00B14	CONTROL B 10K OHM
	R314	ERDS2TJ223	C 22K OHM J 1/4W
	R315	ERDS2TJ224	C 220K OHM J 1/4W
	R316	ERDS2TJ183	C 18K OHM J 1/4W
	R318	ERD25FJ474K	C 470K OHM J 1/4W
	R319	ERDS2TJ223	C 22K OHM J 1/4W
	R323	ERDS2TJ272	C 2.7K OHM J 1/4W
	R325	ERDS2TJ472	C 4.7K OHM J 1/4W
	R326	ERDS2TJ123	C 12K OHM J 1/4W
	R328	ERDS2TJ153	C 15K OHM J 1/4W
	R329	ERDS2TJ123	C 12K OHM J 1/4W
	R331	ERDS2TJ182	C 1.8K OHM J 1/4W
	R335	ERDS2TJ153	C 15K OHM J 1/4W
	R336	ERDS2TJ183	C 18K OHM J 1/4W
	R337	ERDS2TJ182	C 1.8K OHM J 1/4W
	R338	ERDS2TJ153	C 15K OHM J 1/4W
⚠	R339	ERDS2TJ102	C 1K OHM J 1/4W
	R340	ERDS2TJ102	C 1K OHM J 1/4W
	R342	ERDS2TJ182	C 1.8K OHM J 1/4W
	R344	ERDS2TJ151	C 150 OHM J 1/4W
	R345	ERDS2TJ561	C 560 OHM J 1/4W
	R347	ERDS2TJ332	C 3.3K OHM J 1/4W
	R350	ERD25FJ331K	C 330 OHM J 1/4W
	R351	ERD25FJ221K	C 220 OHM J 1/4W
	R352	ERD25FJ221K	C 220 OHM J 1/4W
	R353	ERD25FJ331K	C 330 OHM J 1/4W
	R354	EVN65AA00B53	CONTROL B 5K OHM
	R355	EVN65AA00B53	CONTROL B 5K OHM
	R356	EVN65AA00B53	CONTROL B 5K OHM
	R357	EVN65AA00B52	CONTROL B 500 OHM
	R358	EVN65AA00B52	CONTROL B 500 OHM
	R359	ERD25FJ152K	C 1.5K OHM J 1/4W
	R360	ERD25FJ152K	C 1.5K OHM J 1/4W
	R361	ERD25FJ152K	C 1.5K OHM J 1/4W
	R363	ERC12GJ272	S 2.7K OHM J 1/2W
	R364	ERC12GJ272	S 2.7K OHM J 1/2W
	R365	ERD25FJ222K	C 2.2K OHM J 1/4W
	R366	ERG2ANJ123	M 12K OHM J 2W
	R367	ERG2ANJ123	M 12K OHM J 2W
	R368	ERG2ANJ123	M 12K OHM J 2W
	R369	ERC12GJ272	S 2.7K OHM J 1/2W
	R369	ERDS2TJ153	C 15K OHM J 1/4W
	R370	ERDS2TJ182	C 1.8K OHM J 1/4W
	R371	ERD25FJ562K	C 5.6K OHM J 1/4W
	R372	ERDS2TJ474	C 470K OHM J 1/4W
	R373	ERDS2TJ393	C 39K OHM J 1/4W
	R374	ERDS2TJ221	C 220 OHM J 1/4W
	R375	ERDS2TJ471	C 470 OHM J 1/4W

	Ref.No.	Part No.	Description					Ref.No.	Part No.	Description				
	R376	ERDS2TJ224	C	220K	OHM	J	1/4W	R560	ERG1SJ561	M	560	OHM	J	1W
	R377	ERD25FJ100K	C	10	OHM	J	1/4W	R579	ERDS2TJ471	C	470	OHM	J	1/4W
	R378	ERDS2TJ102	C	1K	OHM	J	1/4W	R603	ERDS2TJ561	C	560	OHM	J	1/4W
	R379	ERD25FJ102K	C	1K	OHM	J	1/4W	R604	ERDS2TJ151	C	150	OHM	J	1/4W
	R380	ERDS2TJ332	C	3.3K	OHM	J	1/4W	R607	ERDS2TJ563	C	56K	OHM	J	1/4W
	R381	ERDS2TJ223	C	22K	OHM	J	1/4W	R608	ERDS2TJ563	C	56K	OHM	J	1/4W
	R382	ERDS2TJ272	C	2.7K	OHM	J	1/4W	R610	ERG1SJ181	M	180	OHM	J	1W
	R383	ERDS2TJ103	C	10K	OHM	J	1/4W	R611	ERDS2TJ103	C	10K	OHM	J	1/4W
	R384	ERDS2TJ152	C	1.5K	OHM	J	1/4W	R612	ERDS2TJ103	C	10K	OHM	J	1/4W
								R613	ERDS2TJ102	C	1K	OHM	J	1/4W
	R389	ERD25FJ222K	C	2.2K	OHM	J	1/4W	R614	ERDS2TJ563	C	56K	OHM	J	1/4W
	R399	ERD25FJ222K	C	2.2K	OHM	J	1/4W	R615	ERDS2TJ563	C	56K	OHM	J	1/4W
	R402	ERD25FJ331K	C	330	OHM	J	1/4W	R616	ERDS2TJ561	C	560	OHM	J	1/4W
	R403	ERDS2TJ152	C	1.5K	OHM	J	1/4W	R623	**ERDS2TJ222**	C	**2.2K**	OHM	J	1/4W
	R410	ERDS2TJ153	C	15K	OHM	J	1/4W	R624	**ERD25FJ472**	C	**4.7K**	OHM	J	1/4W
	R412	ERDS1FJ122	C	1.2K	OHM	J	1/2W	R627	**ERDS2TJ393**	C	**39K**	OHM	J	1/4W
	R413	ERDS1FJ561	C	560	OHM	J	1/2W	R628	ERDS2TJ682	C	6.8K	OHM	J	1/4W
	R414	**ERDS2TJ682**	C	**6.8K**	OHM	J	1/4W	R629	ERDS2TJ683	C	68K	OHM	J	1/4W
	R415	ERD25FJ2R2K	C	2.2	OHM	J	1/4W	R630	ERDS2TJ103	C	10K	OHM	J	1/4W
	R416	ERDS2TJ101	C	100	OHM	J	1/4W	R631	ERDS2TJ103	C	10K	OHM	J	1/4W
	R417	ERDS2TJ392	C	3.9K	OHM	J	1/4W	R632	ERDS2TJ102	C	1K	OHM	J	1/4W
	R419	**ERDS2TJ103**	C	**10K**	OHM	J	1/4W	R633	ERDS2TJ102	C	1K	OHM	J	1/4W
	R420	ERD25FJ393K	C	39K	OHM	J	1/4W	R634	ERDS2TJ750	C	75	OHM	J	1/4W
	R421	ERD25FJ103K	C	10K	OHM	J	1/4W	R635	ERDS2TJ750	C	75	OHM	J	1/4W
	R422	ERD25FJ184K	C	180K	OHM	J	1/4W	R636	ERDS2TJ750	C	75	OHM	J	1/4W
	R423	EVN88AA00B32	CONTROL	B	300	OHM		R637	ERDS2TJ391	C	390	OHM	J	1/4W
	R426	ERDS2TJ272	C	2.7K	OHM	J	1/4W	R638	ERDS2TJ391	C	390	OHM	J	1/4W
	R451	EVMK3GA00B13	CONTROL	B	1K	OHM		R639	ERDS2TJ391	C	390	OHM	J	1/4W
	R470	EVUF2AE25B14	CONTROL	B	10K	OHM		R670	ERDS2TJ223	C	22K	OHM	J	1/4W
	R471	ERDS2TJ682	C	6.8K	OHM	J	1/4W	R671	EVUF3AE25B24	CONTROL	B	20K	OHM	
	R503	ERDS2TJ562	C	5.6K	OHM	J	1/4W	R672	EVUF2AE25B53	CONTROL	B	5K	OHM	
	R504	**ERDS2TJ183**	C	**18K**	OHM	J	1/4W	R673	ERDS2TJ472	C	4.7K	OHM	J	1/4W
	R505	ERDS2TJ332	C	3.3K	OHM	J	1/4W	R674	ERDS2TJ822	C	8.2K	OHM	J	1/4W
	R506	EVN65AA00B14	CONTROL	B	10K	OHM		R675	EVUF2AE25B14	CONTROL	B	10K	OHM	
	R507	ERDS2TJ272	C	2.7K	OHM	J	1/4W	R676	ERDS2TJ823	C	82K	OHM	J	1/4W
	R508	ERD25FJ104K	C	100K	OHM	J	1/4W	R690	EVUF2AE25B14	CONTROL	B	10K	OHM	
	R509	EVN64AA00B34	CONTROL	B	30K	OHM		R693	EVUF2AE25B14	CONTROL	B	10K	OHM	
	R510	ERDS2TJ223	C	22K	OHM	J	1/4W	R694	**ERDS2TJ182**	C	**1.8K**	OHM	J	1/4W
⚠	R511	ERG2ANJ222	M	2.2K	OHM	J	2W	R696	ERDS2TJ101	C	100	OHM	J	1/4W
	R512	ERDS2TJ512	C	5.1K	OHM	J	1/4W	R751	ERD25FJ221K	C	220	OHM	J	1/4W
⚠	R513	ERG1ANJ331	M	330	OHM	J	1W		R759	ERDS2TJ103	C	10K	OHM	J	1/4W
	R514	ERDS2TJ471	C	470	OHM	J	1/4W		R765	ERG1SJ272	M	2.7K	OHM	J	1W
	R515	ERDS2TJ221	C	220	OHM	J	1/4W		R771	ERDS2TJ103	C	10K	OHM	J	1/4W
⚠	R516	ERG3ANJ471	M	470	OHM	J	3W		R772	EVN88AA00B14	CONTROL	B	10K	OHM	
⚠	R517	ERQ12HJ1R0	F	1	OHM	J	1/2W		R773	ERF5AJ270	W	27	OHM	J	5W
⚠	R518	ERQ12HKR68	F	0.68	OHM	K	1/2W		R778	ERDS1FJ122	C	1.2K	OHM	J	1/2W
⚠	R519	ERG3ANJ472	M	4.7K	OHM	J	3W		R779	ERDS1FJ272	C	2.7K	OHM	J	1/2W
	R522	ERDS2TJ223	C	22K	OHM	J	1/4W	⚠	R801	ERF5ZKR82	W	0.82	OHM	K	5W
⚠	R523	ERQ2CJP3R9S	F	3.9	OHM	J	2W	⚠	R803	ERDS1FJ154	C	150K	OHM	J	1/2W
	R525	ERDS2TJ154	C	150K	OHM	J	1/4W	⚠	R804	ERQ2CJP330S	F	33	OHM	J	2W
	R526	ERG2SJ392	M	3.9K	OHM	J	2W	⚠	R805	ERG1ANJ101	M	100	OHM	J	1W
⚠	R527	ERO25CKF2213	M	221K	OHM	F	1/4W	⚠	R806	ERG2ANJ333	M	33K	OHM	J	2W
⚠	R528	ERO25CKF2002	M	20K	OHM	F	1/4W	⚠	R807	ERX1ANJ3R9	M	3.9	OHM	J	1W
	R529	ERD25FJ334K	C	330K	OHM	J	1/4W	⚠	R808	EVN88AA00B13	CONTROL	B	1K	OHM	
	R530	ERDS2TJ183	C	18K	OHM	J	1/4W		R809	ERG1SJ273	M	27K	OHM	J	1W
	R532	ERDS2TJ823	C	82K	OHM	J	1/4W	⚠	R811	ERC12ZGK825	S	8.2M	OHM	K	1/2W
	R534	ERDS2TJ683	C	68K	OHM	J	1/4W	⚠	R812	ERG3SJ330	M	33	OHM	J	3W
	R535	ERD25FJ151K	C	150	OHM	J	1/4W	⚠	R817	ERDS2TJ5R6	C	5.6	OHM	J	1/4W
	R536	ERD25FJ101K	C	100	OHM	J	1/4W	⚠	R818	ERDS2TJ5R6	C	5.6	OHM	J	1/4W
	R537	ERDS2TJ333	C	33K	OHM	J	1/4W	⚠	R823	ERW12PKR22	W	0.22	OHM	K	1/2W
	R538	ERD25FJ473K	C	47K	OHM	J	1/4W	⚠	R824	ERDS2TJ223	C	22K	OHM	J	1/4W
	R540	ERDS1FJ104	C	100K	OHM	J	1/2W		R5201	ERDS2TJ102	C	1K	OHM	J	1/4W

Ref.No.	Part No.	Description
R5202	ERDS2TJ104	C 100K OHM J 1/4W
R5203	ERDS2TJ104	C 100K OHM J 1/4W
R5204	ERDS2TJ102	C 1K OHM J 1/4W
R5205	ERDS2TJ104	C 100K OHM J 1/4W
R5206	ERDS2TJ104	C 100K OHM J 1/4W
R5207	ERDS2TJ102	C 1K OHM J 1/4W
R5208	ERDS2TJ104	C 100K OHM J 1/4W
R5209	ERDS2TJ104	C 100K OHM J 1/4W
R5210	ERDS2TJ562	C 5.6K OHM J 1/4W
R5211	ERDS2TJ682	C 6.8K OHM J 1/4W
R5213	ERDS2TJ472	C 4.7K OHM J 1/4W
R5214	ERDS2TJ221	C 220 OHM J 1/4W
R5215	ERDS2TJ102	C 1K OHM J 1/4W
R5216	ERDS2TJ102	C 1K OHM J 1/4W
R5217	ERDS2TJ102	C 1K OHM J 1/4W
R5218	ERDS2TJ221	C 220 OHM J 1/4W
R5219	ERDS2TJ103	C 10K OHM J 1/4W
R5220	ERD25FJ101K	C 100 OHM J 1/4W
R5224	ERDS2TJ393	C 39K OHM J 1/4W
R5225	ERDS2TJ562	C 5.6K OHM J 1/4W
R5226	ERDS2TJ562	C 5.6K OHM J 1/4W
R5227	ERDS2TJ104	C 100K OHM J 1/4W
R5228	ERDS2TJ223	C 22K OHM J 1/4W
R5229	ERD25FJ101K	C 100 OHM J 1/4W
R5230	ERD25FJ222K	C 2.2K OHM J 1/4W
R5232	ERDS2TJ562	C 5.6K OHM J 1/4W
R5240	ERDS2TJ104	C 100K OHM J 1/4W
R5301	ERDS2TJ331	C 330 OHM J 1/4W
R5302	ERDS2TJ153	C 15K OHM J 1/4W
R5303	ERDS2TJ333	C 33K OHM J 1/4W
R5304	ERDS2TJ122	C 1.2K OHM J 1/4W
R5305	ERDS2TJ331	C 330 OHM J 1/4W
R5306	ERDS2TJ153	C 15K OHM J 1/4W
R5307	ERDS2TJ333	C 33K OHM J 1/4W
R5308	ERDS2TJ122	C 1.2K OHM J 1/4W
R5309	ERDS2TJ331	C 330 OHM J 1/4W
R5310	ERDS2TJ153	C 15K OHM J 1/4W
R5311	ERDS2TJ333	C 33K OHM J 1/4W
R5312	ERDS2TJ122	C 1.2K OHM J 1/4W
R5313	ERDS2TJ331	C 330 OHM J 1/4W
R5314	ERDS2TJ223	C 22K OHM J 1/4W
R5316	ERDS2TJ183	C 18K OHM J 1/4W
R5320	ERD25FJ221K	C 220 OHM J 1/4W
R5321	ERDS1FJ181	C 180 OHM J 1/2W
R5322	ERDS2TJ750	C 75 OHM J 1/4W
R5323	ERDS2TJ101	C 100 OHM J 1/4W
R5324	ERDS1FJ181	C 180 OHM J 1/2W
R5325	ERDS2TJ103	C 10K OHM J 1/4W
R5326	ERDS2TJ750	C 75 OHM J 1/4W
R5327	ERDS2TJ222	C 2.2K OHM J 1/4W
R5328	ERDS2TJ333	C 33K OHM J 1/4W
R5329	ERDS2TJ222	C 2.2K OHM J 1/4W
R5330	ERDS2TJ333	C 33K OHM J 1/4W
R5331	ERDS2TJ103	C 10K OHM J 1/4W
R5332	ERDS2TJ750	C 75 OHM J 1/4W
R5333	ERDS2TJ103	C 10K OHM J 1/4W
R5334	ERDS2TJ750	C 75 OHM J 1/4W
R5336	ERDS2TJ821	C 820 OHM J 1/4W
R5339	ERDS2TJ331	C 330 OHM J 1/4W
R5341	ERDS2TJ224	C 220K OHM J 1/4W
R5342	ERDS2TJ681	C 680 OHM J 1/4W
R5343	ERDS2TJ122	C 1.2K OHM J 1/4W

Ref.No.	Part No.	Description
R5344	ERDS2TJ121	C 120 OHM J 1/4W
R5345	ERDS2TJ471	C 470 OHM J 1/4W
R5346	ERD25FJ154K	C 150K OHM J 1/4W
R5347	ERDS2TJ331	C 330 OHM J 1/4W
R5348	ERDS2TJ104	C 100K OHM J 1/4W
R5349	ERDS2TJ221	C 220 OHM J 1/4W
R5350	ERDS2TJ223	C 22K OHM J 1/4W
R5351	ERDS2TJ123	C 12K OHM J 1/4W
R5352	ERDS2TJ221	C 220 OHM J 1/4W
R5353	ERDS2TJ183	C 18K OHM J 1/4W
R5355	ERDS2TJ223	C 22K OHM J 1/4W
R5356	ERDS2TJ750	C 75 OHM J 1/4W
R5357	ERDS2TJ101	C 100 OHM J 1/4W
R5360	ERDS2TJ122	C 1.2K OHM J 1/4W
R5361	ERDS2TJ102	C 1K OHM J 1/4W
R5365	ERDS2TJ472	C 4.7K OHM J 1/4W
R5366	ERDS2TJ750	C 75 OHM J 1/4W
R5367	ERDS2TJ750	C 75 OHM J 1/4W
R5371	ERDS2TJ331	C 330 OHM J 1/4W
R5372	ERDS2TJ682	C 6.8K OHM J 1/4W
R5374	ERDS2TJ821	C 820 OHM J 1/4W
R5375	ERDS2TJ121	C 120 OHM J 1/4W
R5376	ERDS2TJ332	C 3.3K OHM J 1/4W

OTHERS

	NO18N	MICA SEAT(BIG)
	TES4537	SPRING(TR)
	TES4539	SPRING(TR)
	TES6583	SPRING(IC) SMALL
	TJB87905	REAR TERMINAL BOARD
	TJC6319	TERMINAL
	TJS35161	CRT SOCKET
	TMM15412-1	CLAMPER
	TMM16452	CLAMPER(ANODE)BIG
	TMM17934	MICA SEAT
	TMM7468	CLAMPER
	TMM81416	CORD BAND (SMALL)
	TUC38503	SHIELD CASE
	TUW13611	HEAD HONE BRACKET
	TXAJTA20PZZ	A20-W6 CONNECTOR ASSY
	TXAJTV10P029	10P CONNECTOR ASSY
	TXAJTV2P373	2P CONNECTOR ASSY
	TXAJTV2P374	2P CONNECTOR ASSY
	TXAJTV3P1201	3P CONNECTOR ASSY
	TXAJTV5P300	5P CONNECTOR ASSY
	TXAJTV6P410	6P CONNECTOR ASSY
	TZC10015OZA	CONNECTOR ASSY
	XTV3+10A	SCREW
	XTV3+6J	SCREW
	XTV3+8J	SCREW
	XTWT983G	SCREW
	XTW3+8T	SCREW
A3	TEL302-9	TERMINAL
A4	TEL302-9	TERMINAL
A7	TJS118610	4P CONNECTOR
A8	TJS118670	10P CONNECTOR
A12	TJS118620	SHORT PLUG
A17	TEL302-9	TERMINAL
A20	TJS118630	6P CONNECTOR
A21	TJS118590	SHORT PLUG
A22	TJS118600	PHONO PIN
A23	TEL302-9	TERMINAL

Ref.No.	Part No.	Description
A26	TJS118590	SHORT PLUG
A55	TJS118630	6P CONNECTOR
A1-1	TEL302-9	TERMINAL
A1-2	TEL302-9	TERMINAL
A1-3	TEL302-9	TERMINAL
A1-4	TEL302-9	TERMINAL
DEG-L	TEL302-9	TERMINAL
DEG-R	TEL302-9	TERMINAL
DY-1	TEL302-9	TERMINAL
DY-2	TEL302-9	TERMINAL
DY-3	TEL302-9	TERMINAL
DY-4	TEL302-9	TERMINAL
H2-	TJE15347	TERMINAL
H4-	TJE15347	TERMINAL
JK222	XCJT117090	JACK
S301	EVQR1AL13	SWITCH
S5301	TSE10410	SWITCH
SW5351	TSE80374	SWITCH
TPD1	TEL302-9	TERMINAL
TPD2	TEL302-9	TERMINAL
TPY2	TJE7302	TERMINAL
TPY3	TJE7302	TERMINAL
TPY4	TJE7302	TERMINAL
TPY5	TJE7302	TERMINAL
TPY6	TJE7302	TERMINAL
TPY7	TJE7302	TERMINAL
W1	TJS118620	SHORT PLUG
W6	TJS118630	6P CONNECTOR
X601	TSS2026M	CRYSTAL OSCILLATOR
Y11	TEL302-9	TERMINAL
Y12	TEL302-9	TERMINAL

Printed in Japan
87083200 Ⓗ AH